yamato®

# Parts List

## HIGH SPEED CYLINDER BED CHAINSTITCH MACHINE

# VG2700

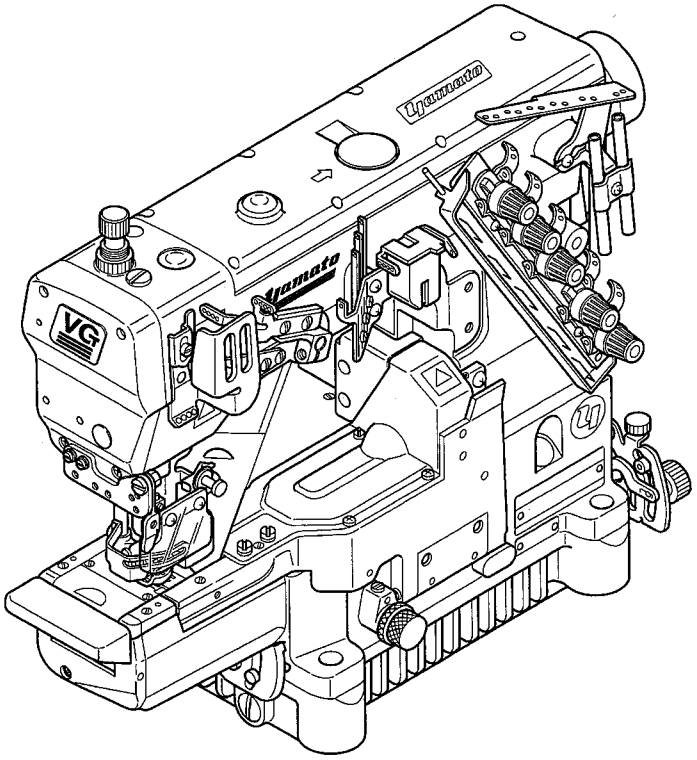


## MODELS & DEVICES

| | | |
|---|---|---|
| VG2700 | VG2700-WF1 | VG2703 |
| VG2708-WF8 | VG2713 | VG2713-WF2 |
| VG2740 | VG2740P | VG2740-WF1 |
| VG2740-SM | VG2760 | |

EC EL1

YAMATO SEWING MACHINE MFG. CO.,LTD.

# パーツリストの見方

このパーツリストはVG2700-148M, 156M, 164Mを基本モデルにしてイラストを作成しています。
項目1～13には基本モデルを記載しています。
項目14～サブモデル、付帯装置等を記載しています。
パーツリストに記載されているカラーの寸法は内径×外径×幅を表わしています。

**記号の説明（Parts No. の隣に記載されています。）**

［　］前回のパーツリストに対して、今回変更された部品を表わしています。
　［　］内は旧Parts No. 及びネジ類の形状

◆　前回のパーツリストに対して、今回追加された部品及びモデルを表わしています。

**部品注文の際のご注意**

☆　このパーツリストに記載されている部品をご注文の際は、Parts No.(例えば、3500201)でお願いします。

☆　0068011の場合は、0068011又は68011でご注文下さい。

☆　エアチューブ御注文の際は品番と長さをお知らせ下さい。

なお、このパーツリストの記載事項は、改良により変更される場合がありますのでご了承下さい。

---

# How to use this Parts List

The illustrations on this Parts List are drawn on the basis of VG2700-148M, 156M, 164M.
The items from No.1 to No.13 contain the standerd model.
The following items included No.14 contain the submodel and Devices.
The dimension of Collar on this Parts List shows Inside diameter X Outside diameter X Width.

**Explanation of Marks（marked at the Side of Part No.)**

[ ] means this part is changed from the previous Parts List.
Inside of [ ] shows the previous Part No. and the shape of screw or the like.

◆　means this part and model is added to the previons Parts List.

**How to place an order for the parts**

☆　When placing an order for the parts from this Parts List, please clearly state the Parts No. (e.g.3500201) which you require so that we can deliver the correct Parts to you.

☆　When the Part No. is "0068011", please place an order for the part by showing "0068011" or "68011".

☆　When ordering Air Tube, please inform us of the Part No. and the length.

This Parts Listis subject to change without notice.

# Contents 目次


| | | |
|---|---|---|
| MISCELLANEOUS COVERS(1) | カバー関係 (1) | 1 |
| MISCELLANEOUS COVERS(2) | カバー関係 (2) | 2 |
| MISCELLANEOUS THREAD EYELETS | 糸道関係 | 3 |
| MISCELLANEOUS BUSHINGS & EYE GUARD | ブッシュ及びアイガード関係 | 4 |
| NEEDLE GUARD & MAIN SHAFT DRIVING MECHANISM | 針受ケ及び下軸機構 | 5 |
| UPPER SHAFT & NEEDLE THREAD TAKE-UP MECHANISM | 上軸及び針糸繰リ機構 | 6 |
| NEEDLE BAR MECHANISM | 針棒機構 | 7 |
| PRESSER FOOT MECHANISM | 押工機構 | 8 |
| SPREADER MECHANISM | 飾リ糸ルーパ機構 | 9 |
| LOOPER DRIVING MECHANISM | ルーパ機構 | 10 |
| FEED DRIVING CONTROL MECHANISM | 前送リ調節機構 | 11 |
| FEED DRIVING MECHANISM | 送リ機構 | 12 |
| LUBRICATING MECHANISM | 給油機構 | 13 |
| PULLER MECHANISM EXCLUSIVE PARTS(1) | プラー機構専用部品(1) | 14 |
| PULLER MECHANISM EXCLUSIVE PARTS(2) | プラー機構専用部品(2) | 15 |
| PULLER MECHANISM EXCLUSIVE PARTS(3) | プラー機構専用部品(3) | 16 |
| VG2700 EXCLUSIVE PARTS | サブモデル専用部品 | 17 |
| VG2700-□□□□-WF1 EXCLUSIVE PARTS | サブモデル専用部品 | 18 |
| VG2703 EXCLUSIVE PARTS(1) | サブモデル専用部品(1) | 19 |
| VG2703 EXCLUSIVE PARTS(2) | サブモデル専用部品(2) | 20 |
| VG2708-WF8 EXCLUSIVE PARTS | サブモデル専用部品 | 21 |
| VG2713-□□□□-T1N, T4N EXCLUSIVE PARTS | サブモデル専用部品 | 22 |
| VG2713-□□□□-T1A, T2A, T4A EXCLUSIVE PARTS | サブモデル専用部品 | 23 |
| VG2713-□□□□-K1N, K4N EXCLUSIVE PARTS | サブモデル専用部品 | 24 |
| VG2713-□□□□-□□□-WF2 EXCLUSIVE PARTS | サブモデル専用部品 | 25 |
| VG2740, 2740P EXCLUSIVE PARTS(1) | サブモデル専用部品(1) | 26 |
| VG2740, 2740P EXCLUSIVE PARTS(2) | サブモデル専用部品(2) | 27 |
| ◆ VG2740-156S1-WF1 EXCLUSIVE PARTS | サブモデル専用部品 | 28 |
| ◆ VG2740(P)-140M-SM, 148M-SM EXCLUSIVE PARTS | サブモデル専用部品 | 29 |
| VG2760 EXCLUSIVE PARTS | サブモデル専用部品 | 30 |

# Contents 目次


| | | |
|---|---|---|
| ◆ EC DEVICE(1) | EC装置(1) | 31 |
| ◆ EC DEVICE(2) | EC装置(2) | 32 |
| EL1 DEVICE | EL1装置 | 33 |
| EXTRA PARTS | 特注部品 | 34 |
| THREAD STAND | 糸立台 | 35 |
| ACCESSORIES(1) | アクセサリ関係(1) | 36 |
| ACCESSORIES(2) | アクセサリ関係(2) | 37 |
| WARNING LABEL | 警告ラベル | 38 |
| LIST of MAIN SPARE PARTS(1) | 主要部品リスト(1) | 39 |
| LIST of MAIN SPARE PARTS(2) | 主要部品リスト(2) | 40 |
| LIST of MAIN SPARE PARTS(3) | 主要部品リスト(3) | 41 |
| LIST of MAIN SPARE PARTS(4) | 主要部品リスト(4) | 42 |
| LIST of MAIN SPARE PARTS(5) | 主要部品リスト(5) | 43 |
| INDEX | 索引 | 44 |

1

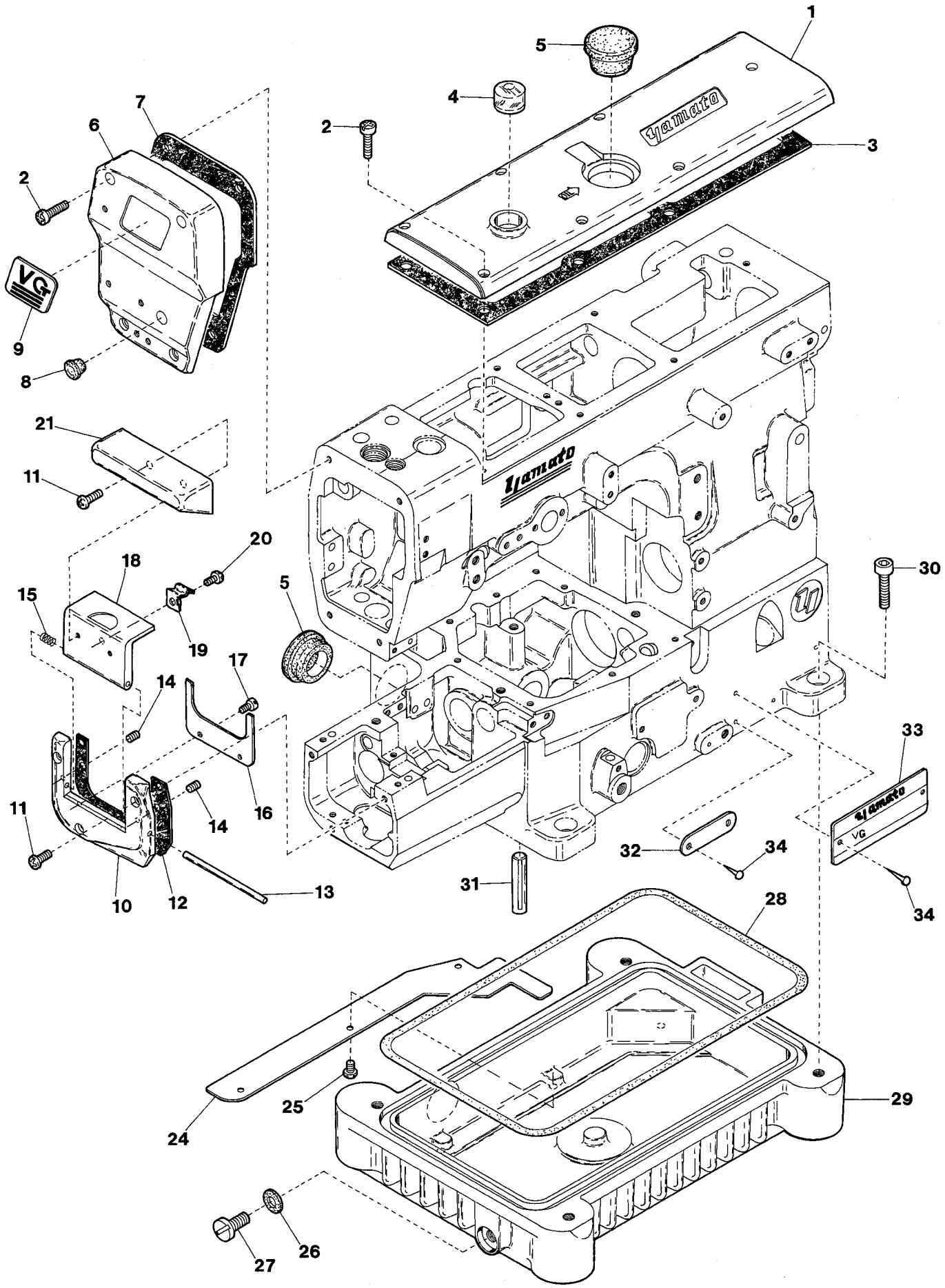
1
2
3
4
5
6
7
8
9
10
11
12
13
14
15
16
17
18
19
20
21
24
25
26
27
28
29
30
31
32
33
34
VG
Yamato

VG2700

| Ref.No | Parts No. | Description | 品 名 | Amt. Req |
|---|---|---|---|---|
| 1 | 3500201 | Top Cover | 上カバー | 1 |
| 2 | 110045 | Screw(M4-0.7 × 12) | 止ネジ | 11 |
| 3 | 3500430 | Top Cover Gasket | 上カバーパッキン | 1 |
| 4 | 0068011 | Oil Sight Window | オイル確認窓 | 1 |
| 5 | 0020759 | Top Cover Seal Plug | 上カバー詰栓 | 2 |
| 6 | 3500207 | Head Cover | ヘッドカバー | 1 |
| 7 | 3500431 | Head Cover Gasket | ヘッドカバーパッキン | 1 |
| 8 | 0093864 | Head Cover Seal Plug | 詰栓 | 1 |
| 9 | 390164 | "VG" Emblem | VGエンブレム | 1 |
| 10 | 3500212 | Side Cover(Lower) | 横開キカバー(下) | 1 |
| 11 | 110048 | Screw(M4-0.7 × 10) | 止ネジ | 5 |
| 12 | 3500215 | Side Cover Gasket | 横開キカバーパッキン | 1 |
| 13 | 3500213 | Side Cover Hinge Pin | 横開キカバーヒンジピン | 1 |
| 14 | 160000 | Screw(M3-0.5 × 3) | 止ネジ | 2 |
| 15 | 0037164 | Spring | バネ | 1 |
| 16 | 3500216 | Oil Defender | 防油板 | 1 |
| 17 | 006233 | Screw(M3-0.5 × 5) | 止ネジ | 2 |
| 18 | 3500211 | Side Cover(Upper) | 横開キカバー(上) | 1 |
| 19 | 3500214 | Side Cover Hook | 横開キカバーフック | 1 |
| 20 | 110012 | Screw(M4-0.7 × 5) | 止ネジ | 1 |
| 21 | 3500217 | Extension Cover | エクステンションカバー | 1 |
| 22 | | | | |
| 23 | | | | |
| 24 | 3500007 | Wind Guide Plate | 風案内板 | 1 |
| 25 | 110013 | Screw(M4-0.7 × 8) | 止ネジ | 3 |
| 26 | 0020137 | Drain Hole Seal | 油抜キネジパッキン | 1 |
| 27 | 005075 | Screw(3/8-24 × 8) | 油抜キネジ | 1 |
| 28 | 3500005 | Oil Reservoir Gasket | 油受ケパッキン | 1 |
| 29 | 3500004 | Oil Reservoir Gasket | 油受ケ | 1 |
| 30 | 120016 | Screw(M8-1.25 × 20) | 止ネジ | 4 |
| 31 | 340000 | Machine Frame Supporting Bar | ベッド支エ棒 | 4 |
| 32 | 2049401 | Serial Number Plate | 機番プレート | 1 |
| 33 | 4109403 | Model Plate(See the below) | 型式板(下記参照) | 1 |
| 34 | 000726 | Rivet | 止メ鋲 | 4 |

Note : Order for Model Plate must be accompanied by model designation(including symbols of gauge and devices).

(注) 型式板を御注文の際は機種名(ゲージ記号、附帯装置含む)をお知らせください。

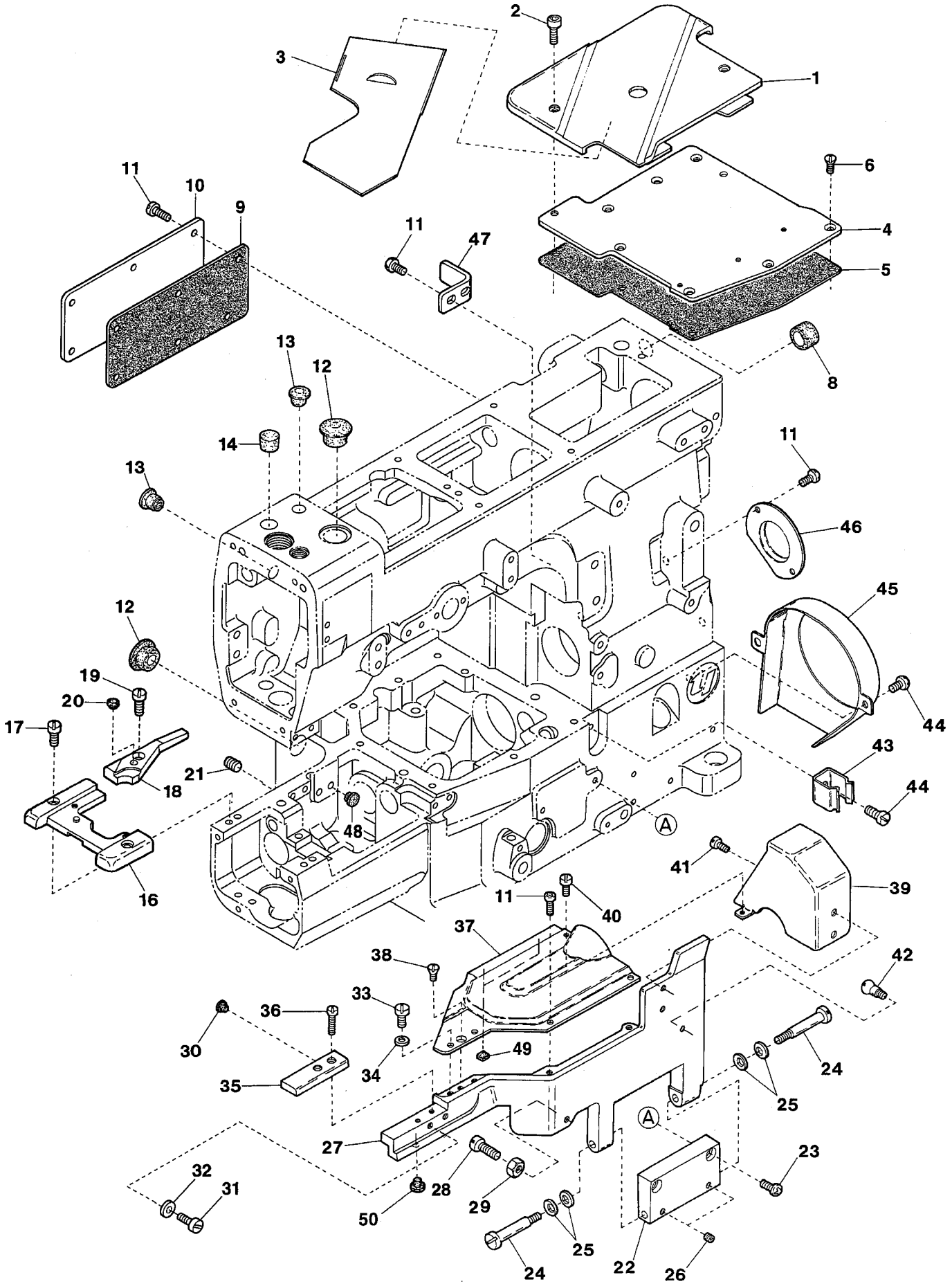
1
2
3
4
5
6
8
9
10
11
12
13
14
16
17
18
19
20
21
22
23
24
25
26
27
28
29
30
31
32
33
34
35
36
37
38
39
40
41
42
43
44
45
46
47
48
49
50
A

| Ref.No | Parts No. | | Description | 品 名 | Amt. Req |
|---|---|---|---|---|---|
| 1 | 3500224 | | Cloth Plate(Large) | クロスプレート(大) | 1 |
| 2 | 120009 | | Screw(M4-0.7 × 12) | 止ネジ | 2 |
| 3 | 3500219 | | Slide Cover | 滑り板 | 1 |
| 4 | 3500227 | | Crank Chamber Cover | ナカカバー | 1 |
| 5 | 3500228 | | Crank Chamber Cover Gasket | ナカカバーパッキン | 1 |
| 6 | 130003 | | Screw(M4-0.7 × 7.3) | 止ネジ | 7 |
| 7 | | | | | |
| 8 | 0020052 | | Seal Plug | 詰栓 | 1 |
| 9 | 3500432 | | Rear Cover Gasket | 後カバーパッキン | 1 |
| 10 | 3100016 | | Rear Cover | 後カバー | 1 |
| 11 | 110013 | | Screw(M4-0.7 × 8) | 止ネジ | 12 |
| 12 | 3500012 | | Seal Plug | 詰栓 | 2 |
| 13 | 0093864 | | Seal Plug | 詰栓 | 2 |
| 14 | 0065275 | | Seal Plug | 詰栓 | 1 |
| 15 | | | | | |
| 16 | 3500255 | | Stitch Plate Holder | 針板台 | 1 |
| 17 | 110041 | | Screw(M4-0.7 × 8) | 止ネジ | 2 |
| 18 | 3500256 | | Slide Cover Supplementary Block | 滑り板補助ブロック | 1 |
| 19 | 006202 | | Screw(M4-0.7 × 6) | 止ネジ | 1 |
| 20 | 330011 | | Seal Plug(φ 4.9 × 4.3) | 詰栓 | 1 |
| 21 | 160005 | | Screw(M6-1 × 8) | 止ネジ | 1 |
| 22 | 3500223 | | Front Cover Hinge | 前開キカバーヒンジ | 1 |
| 23 | 110016 | | Screw(M4-0.7 × 14) | 止ネジ | 2 |
| 24 | 170001 | | Screw(M4-0.7 × 8) | 止ネジ | 2 |
| 25 | 300100 | | Conical Spring Washer | 皿バネワッシャ | 4 |
| 26 | 160001 | | Screw(M4-0.7 × 4) | 止ネジ | 2 |
| 27 | 3500222 | | Front Cover(Lower) | 前開キカバー(下) | 1 |
| 28 | 110031 | [110045] | Screw(M4-0.7 × 12)[M4-0.7 × 12] | 止ネジ | 1 |
| 29 | 000015 | | Nut | ナット | 1 |
| 30 | 3200033 | | Seal Plug | 詰栓 | 1 |
| 31 | 110009 | | Screw(M4-0.7 × 8) | 止ネジ | 2 |
| 32 | 000538 | | Washer | ワッシャ | 2 |
| 33 | 110031 | [110009] | Screw(M4-0.7 × 12)[M4-0.7 × 8] | 止ネジ | 2 |
| 34 | 000665 | [000538] | Washer | ワッシャ | 2 |
| 35 | 3500225 | | Supplementary Block | 補助ブロック | 1 |
| 36 | 110022 | | Screw(M3-0.5 × 10) | 止ネジ | 2 |
| 37 | 3500221 | | Front Cover(Upper) | 前開キカバー(上) | 1 |
| 38 | 130002 | | Screw(M3-0.5 × 6) | 止ネジ | 1 |
| 39 | 3500233 | | Thread Take-up Cover(Front) | カムカバー(前) | 1 |
| 40 | 110002 | | Screw(M3-0.5 × 5) | 止ネジ | 1 |
| 41 | 007627 | | Screw(M4-0.7 × 6) | 止ネジ | 2 |
| 42 | 190078 | | Screw(M4-0.7 × 5) | バネ掛ケネジ | 2 |
| 43 | 0094201 | | Cover Latch Spring | カバーラッチバネ | 1 |
| 44 | 110012 | | Screw(M4-0.7 × 5) | 止ネジ | 3 |
| 45 | 3500008 | | Oil Cooling Fan Cover | 冷却ファンカバー | 1 |
| 46 | 3500230 | | Ball Bearing Holder | ベアリング押エ | 1 |
| 47 | 3200013 | | Belt Cover Support | ベルトカバー支エ | 1 |
| 48 | 330011 ◆ | | Seal Plug(φ 4.9 × 3.5) | 詰栓 | 2 |
| 49 | 3500226 | | Cushion | クッション | 2 |
| 50 | 330019 | [330011] | Seal Plug(φ 4.9 × 3.5)[φ 4.9 × 4.3] | 詰栓 | 1 |

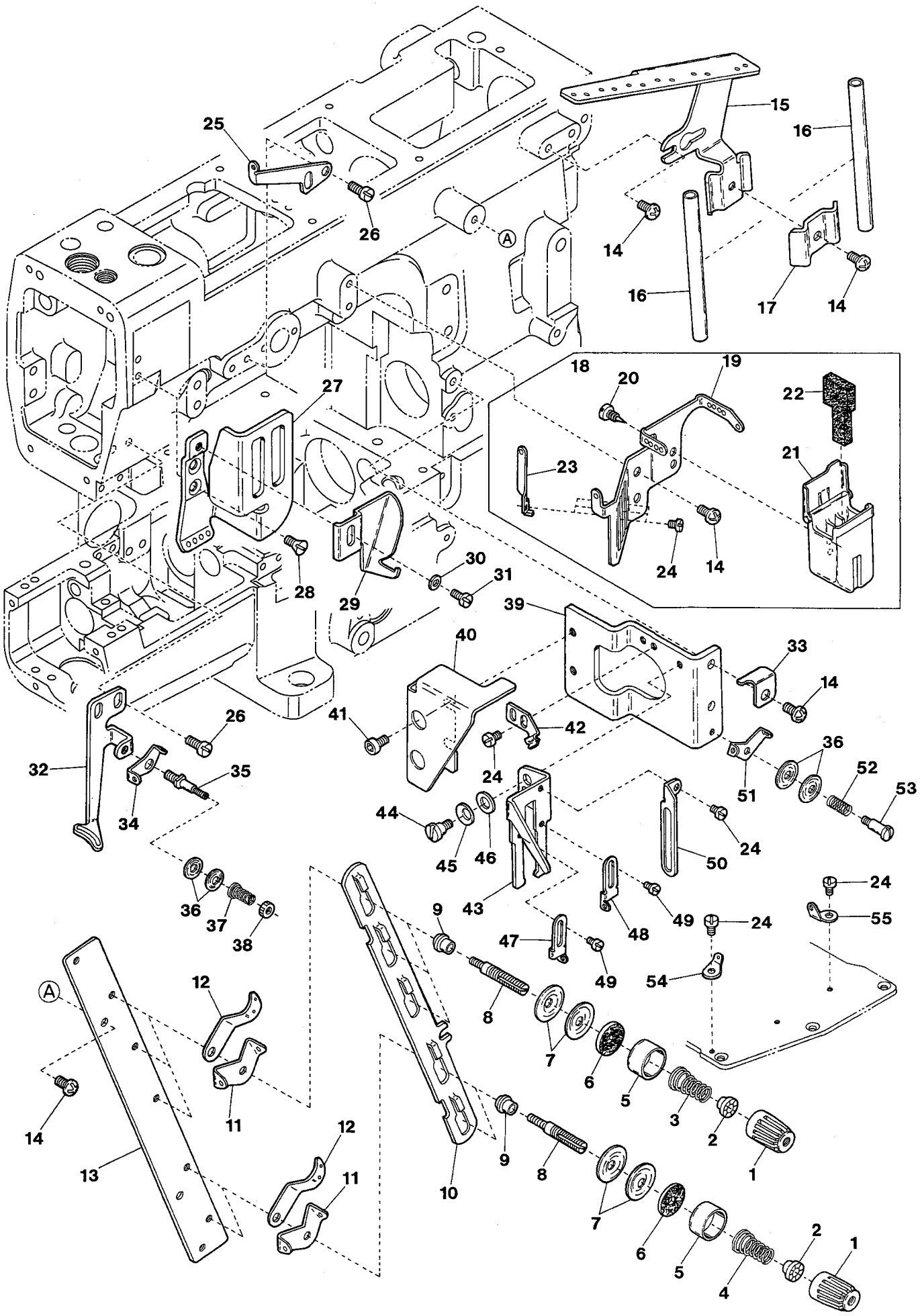
25
26
15
16
14
16
17
14
A
18
20
19
22
21
23
24
14
27
28
29
30
31
39
40
33
14
41
42
26
24
32
35
34
36
52
53
51
44
45
46
24
50
43
36
37
38
9
49
48
24
55
47
49
54
A
12
8
7
6
5
3
2
1
14
11
13
12
11
9
8
10
7
6
5
4
2
1

VG2700

| Ref.No | Parts No. | | Description | 品 名 | Amt. Req |
|---|---|---|---|---|---|
| 1 | 0024084 | | Thread Tension Spring Cap | 糸調子バネキャップ(上) | 5 |
| 2 | 0024083 | | Tension Spring Bushing | 糸調子ナット回り止メ | 5 |
| 3 | 0030255 | | Tension Spring(Needle) | 糸調子バネ(針糸) | 3 |
| 4 | 0032952 | | Tension Spring(Looper, Top Cover) | 糸調子バネ(ルーパ, 飾り) | 2 |
| 5 | 0090071 | | Thread Tension Spring Retainer | 糸調子バネキャップ(下) | 5 |
| 6 | 000177 | | Felt | フェルト | 5 |
| 7 | 0031111 | | Tension Disc | 糸調子皿 | 10 |
| 8 | 290029 | | Tension Post | 糸調子棒 | 5 |
| 9 | 0090812 | | Tension Post Ferrule | 糸調子棒糸摺レ | 5 |
| 10 | 3500287 | | Tension Disc Separator | 糸緩メ板 | 1 |
| | | | | | |
| 11 | 0090856 | | Tension Disc Eyelet | 糸調子皿糸道 | 5 |
| 12 | 0090807 | | Thread Lead-in Guide | 糸調子台糸道 | 5 |
| 13 | 3500286 | | Tension Post Support | 糸調子台 | 1 |
| 14 | 110013 | | Screw(M4-0.7 × 8) | 止ネジ | 9 |
| 15 | 3500284 | | Thread Guide Plate | 糸案内板 | 1 |
| 16 | 0020119 | | Thread Eyelet Pipe(Short) | 糸道パイプ(短) | 2 |
| 17 | 3500285 | | Thread Eyelet Pipe Holder | 糸道パイプ押エ | 2 |
| 18 | 3500288 | | SP Device, Complete Set | SP装置(組) | 1 |
| 19 | 3500281 | | Needle Thread Eyelet Bracket | 針糸道台 | 1 |
| 20 | 350009 | | Tapping Screw(3 × 6mm) | タッピンネジ | 2 |
| | | | | | |
| 21 | 3100384 | | SP Container | SPタンク | 1 |
| 22 | 3100386 | | Felt | SPフェルト | 1 |
| 23 | 3500282 | | Needle Thread Eyelet | 針糸道 | 3 |
| 24 | 110054 | | Screw(M3-0.5 × 3.5) | 止ネジ | 8 |
| 25 | 3500269 | | Top Cover Thread Eyelet(Upper) | 飾り糸道(上) | 1 |
| 26 | 110009 | | Screw(M4-0.7 × 8) | 止ネジ | 4 |
| 27 | 3500202 | | Needle Thread Take-up Guard | 針糸繰リガード | 1 |
| 28 | 130003 | [130002] | Screw(M4-0.7 × 7.3)[M3-0.5 × 6] | 止ネジ | 2 |
| 29 | 3500435 | [3500277] | Needle Thread Guide | 針糸受ケ | 1 |
| 30 | 000538 | | Washer | ワッシャ | 1 |
| | | | | | |
| 31 | 007627 | | Screw(M4-0.7 × 6) | 止ネジ | 1 |
| 32 | 3500270 | | Top Cover Thread Guide | 飾り糸案内 | 1 |
| 33 | 3500238 | | Eyelet Holder Stopper | カム糸道板ストッパ | 1 |
| 34 | 3500271 | | Top Cover Thread Eyelet | 飾り小調子糸道 | 1 |
| 35 | 001818 | | Tension Post | 糸調子棒 | 1 |
| 36 | 0037108 | | Top Cover Tension Disc | 小調子皿 | 4 |
| 37 | 0035813 | | Top Cover Tension Spring | 飾り糸調子バネ | 1 |
| 38 | 000360 | | Nut | ナット | 1 |
| 39 | 3500232 | | Thread Take-up Eyelet Bracket | カム糸道台 | 1 |
| 40 | 3500234 | | Thread Take-up Cover(Rear) | カムカバー(後) | 1 |

Ref. No. 41 to 55 See the following page.

3

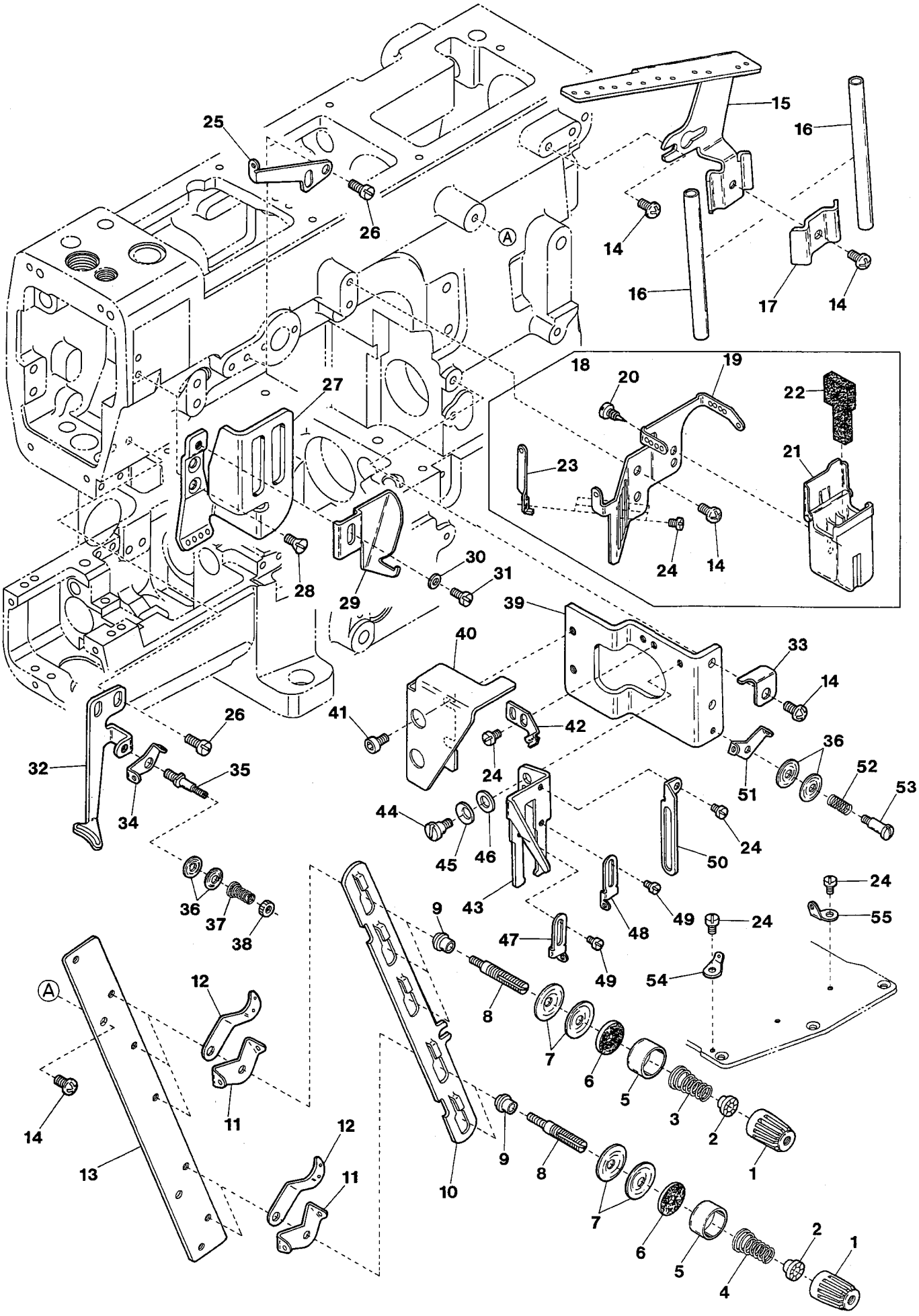
25
26
15
16
14
16
17
14
18
20
19
22
21
23
24
14
27
28
29
30
31
39
40
33
14
41
26
42
24
32
35
34
36
52
53
51
44
45
46
24
50
36
37
38
43
9
49
48
24
55
47
49
54
A
12
8
7
6
5
3
2
1
14
11
13
12
11
9
8
10
7
6
5
4
2
1

VG2700

| Ref.No | Parts No. | Description | 品　名 | Amt. Req |
|---|---|---|---|---|
| 41 | 006202 | Screw(M4-0.7 × 6) | 止ネジ | 2 |
| 42 | 3500237 | Latch Spring | ラッチバネ | 1 |
| 43 | 3500240 | Thread Take-up Eyelet Holder | カム糸道板 | 1 |
| 44 | 170010 | Screw(M4-0.7 × 4) | 止ネジ | 1 |
| 45 | 300100 | Conical Spring Washer | 皿バネワッシャ | 1 |
| 46 | 000669 | Washer | ワッシャ | 1 |
| 47 | 3500245 | Thread Take-up Eyelet(Left) | カム糸道(左) | 1 |
| 48 | 3500246 | Thread Take-up Eyelet(Right) | カム糸道(右) | 1 |
| 49 | 110027 | Screw(M2.5-0.45 × 3.5) | 止ネジ | 2 |
| 50 | 3500242 | Looper Thread Guide | ルーパ糸案内 | 1 |
| | | | | |
| 51 | 3500247 | Looper Thread Eyelet | ルーパ小調子糸道 | 1 |
| 52 | 0032426 | Looper Thread Retainer Spring | 小調子バネ | 1 |
| 53 | 170042 | Screw(M3-0.5 × 5) | 止ネジ | 1 |
| 54 | 3500250 | Looper Thread Eyelet(Center) | ルーパ糸道(中) | 1 |
| 55 | 3500249 | Looper Thread Eyelet(Right) | ルーパ糸道(右) | 1 |

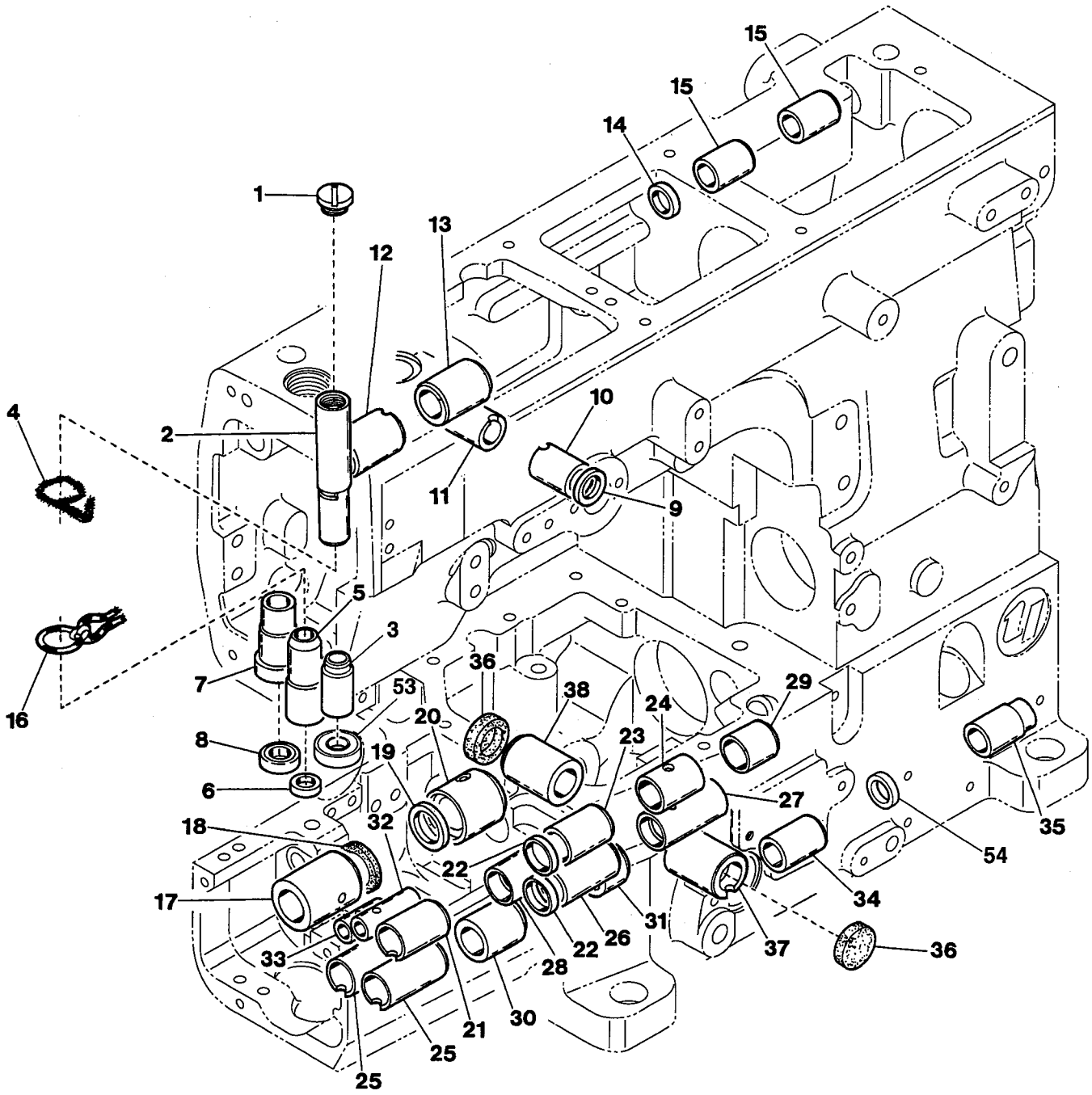
1
2
3
4
5
6
7
8
9
10
11
12
13
14
15
15
16
17
18
19
20
21
22
22
23
24
25
25
26
27
28
29
30
31
32
33
34
35
36
36
37
38
53
54

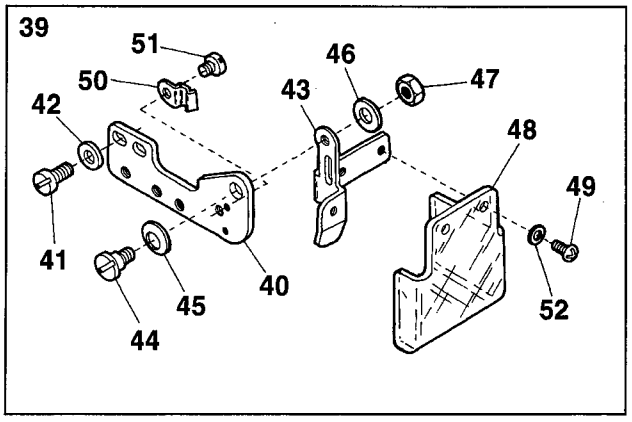
39
40
41
42
43
44
45
46
47
48
49
50
51
52

# MISCELLANEOUS BUSHINGS & EYE GUARD　ブッシュ及びアイガード関係4

| Ref.No | Parts No. | | Description | 品　名 | Amt. Req |
|---|---|---|---|---|---|
| 1 | 110116 | | Screw(M10-1.5 × 4) | 止ネジ | 1 |
| 2 | 3500042 | | Needle Bar Bushing(Upper) | 針棒ブッシュ(上) | 1 |
| 3 | 3500088 | [3160128] | Needle Bar Bushing(Lower) | 針棒ブッシュ(下) | 1 |
| 4 | 310106 | | Laced Wire(φ 3 × 130mm) | モール | 1 |
| 5 | 3100099 | | Presser Bar Bushing | 押工棒ブッシュ | 1 |
| 6 | 3204021 | [0030291] | Oil Seal | オイルシール | 1 |
| 7 | 3100100 | | Spreader Driving Bar Bushing | 飾リ糸ルーパ棒ブッシュ | 1 |
| 8 | 0063055 | | Oil Seal | オイルシール | 1 |
| 9 | 3500050 | [2100272] | Oil Seal | オイルシール | 1 |
| 10 | 3500044 | | Needle Thread Take-up Bushing(Front) | 針糸繰リ軸ブッシュ(前) | 1 |
| 11 | 3500045 | | Needle Thread Take-up Bushing(Rear) | 針糸繰リ軸ブッシュ(後) | 1 |
| 12 | 3500047 | | Spreader Driving Shaft Bushing(Left) | 飾リ糸ルーパ軸ブッシュ(左) | 1 |
| 13 | 3500048 | | Spreader Driving Shaft Bushing(Right) | 飾リ糸ルーパ軸ブッシュ(右) | 1 |
| 14 | 3500041 | | Oil Seal | オイルシール | 1 |
| 15 | 3500046 | | Foot Lifter Lever Bushing | 押工揚ゲ軸ブッシュ | 2 |
| 16 | 000195 | | Oil Wick(No.4-175mm) | 油芯 | 1 |
| 17 | 3500021 | | Lower Shaft Bushing(Left) | 下軸ブッシュ(左) | 1 |
| 18 | 3500407 | | Oiling Felt | 給油フェルト | 1 |
| 19 | 3500040 | | Oil Seal | オイルシール | 1 |
| 20 | 3500022 | | Lower Shaft Bushing(Right) | 下軸ブッシュ(右) | 1 |
| 21 | 3500030 | | Feed Bar Lift Shaft Bushing(Left) | 送リ上下軸ブッシュ(左) | 1 |
| 22 | 3500039 | | Oil Seal | オイルシール | 2 |
| 23 | 3500031 | | Feed Bar Lift Shaft Bushing(Middle) | 送リ上下軸ブッシュ(中) | 1 |
| 24 | 3500032 | | Feed Bar Lift Shaft Bushing(Right) | 送リ上下軸ブッシュ(右) | 1 |
| 25 | 3500025 | | Feed Bar Shaft Bushing(Left) | 送リ軸ブッシュ(左) | 2 |
| 26 | 3500028 | | Differential Feed Bar Shaft Bushing(Middle) | 前送リ軸ブッシュ(中) | 1 |
| 27 | 3500029 | | Differential Feed Bar Shaft Bushing(Right) | 前送リ軸ブッシュ(右) | 1 |
| 28 | 3500026 | | Feed Bar Shaft Bushing(Middle) | 送リ軸ブッシュ(中) | 1 |
| 29 | 3500027 | | Feed Bar Shaft Bushing(Right) | 送リ軸ブッシュ(右) | 1 |
| 30 | 3500023 | | Main Feed Lever Shaft Bushing(Left) | 後送リレバー軸ブッシュ(左) | 1 |
| 31 | 3500024 | | Main Feed Lever Shaft Bushing(Right) | 後送リレバー軸ブッシュ(右) | 1 |
| 32 | 3500033 | | Needle Guard Holder Bushing(Front) | 針受ケ台ブッシュ(前) | 1 |
| 33 | 3500034 | | Needle Guard Holder Bushing(Rear) | 針受ケ台ブッシュ(後) | 1 |
| 34 | 3500035 | | Differential Lever Shaft Bushing(Left) | 差動レバー軸ブッシュ(左) | 1 |
| 35 | 3500036 | | Differential Lever Shaft Bushing(Right) | 差動レバー軸ブッシュ(右) | 1 |
| 36 | 3100006 | | Seal Plug | 詰栓 | 2 |
| 37 | 3500037 | | Looper Driving Shaft Bushing(Front) | ルーパ軸ブッシュ(前) | 1 |
| 38 | 3500038 | | Looper Driving Shaft Bushing(Rear) | ルーパ軸ブッシュ(後) | 1 |
| 39 | 3500203 | | Eye Guard, Complete Set | アイガード(組) | 1 |
| 40 | 3500204 | | Air Wiper Bracket | エアワイパブラケット | 1 |

Ref. No. 41 to 54　See the following page

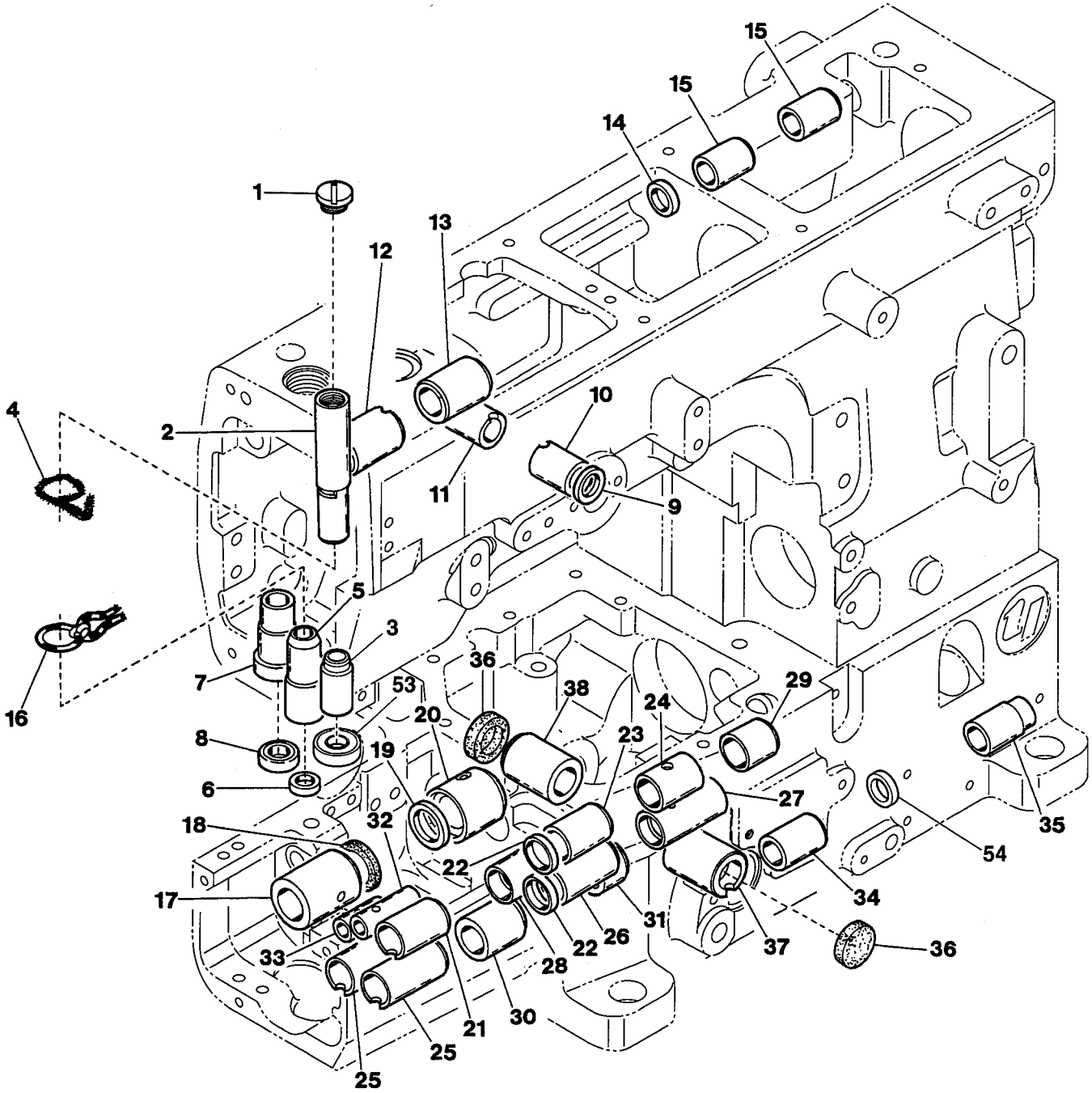
1
2
3
4
5
6
7
8
9
10
11
12
13
14
15
15
16
17
18
19
20
21
22
22
23
24
25
25
26
27
28
29
30
31
32
33
34
35
36
36
37
38
53
54

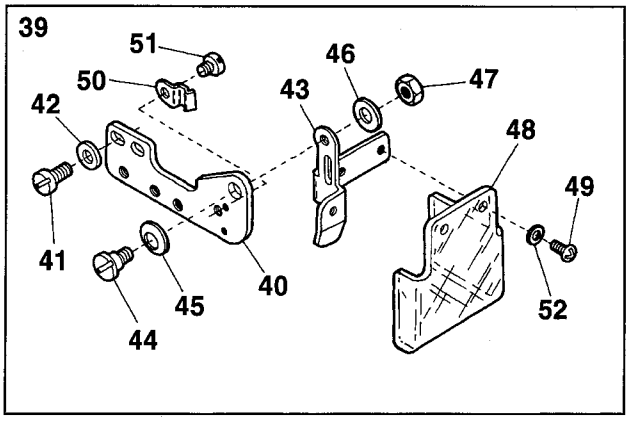
39
40
41
42
43
44
45
46
47
48
49
50
51
52

# MISCELLANEOUS BUSHINGS & EYE GUARD　ブッシュ及びアイガード関係4

| Ref.No | Parts No. | | Description | 品　名 | Amt. Req |
|---|---|---|---|---|---|
| 41 | 110009 | | Screw(M4-0.7 × 8) | 止ネジ | 2 |
| 42 | 000538 | | Washer | ワッシャ | 2 |
| 43 | 3500205 | | Eye Guard Holder | アイガード台 | 1 |
| 44 | 170044 | | Screw(M4-0.7 × 7) | 止ネジ | 1 |
| 45 | 300104 | [000010] | Conical Spring Washer | 皿バネワッシャ | 1 |
| 46 | 000663 | | Washer | ワッシャ | 1 |
| 47 | 000022 | | Nut | ナット | 1 |
| 48 | 3500206 | | Eye Guard | アイガード | 1 |
| 49 | 110076 | | Screw(M3-0.5 × 6) | 止ネジ | 2 |
| 50 | 3500208 | | Stopper Spring | ストッパバネ | 1 |
| | | | | | |
| 51 | 110030 | | Screw(M3-0.5 × 2.6) | 止ネジ | 1 |
| 52 | 000014 | | Washer | ワッシャ | 2 |
| 53 | 3204020 | ◆ | Oil Seal | オイルシール | 1 |
| 54 | 3500041 | ◆ | Oil Seal | オイルシール | 1 |

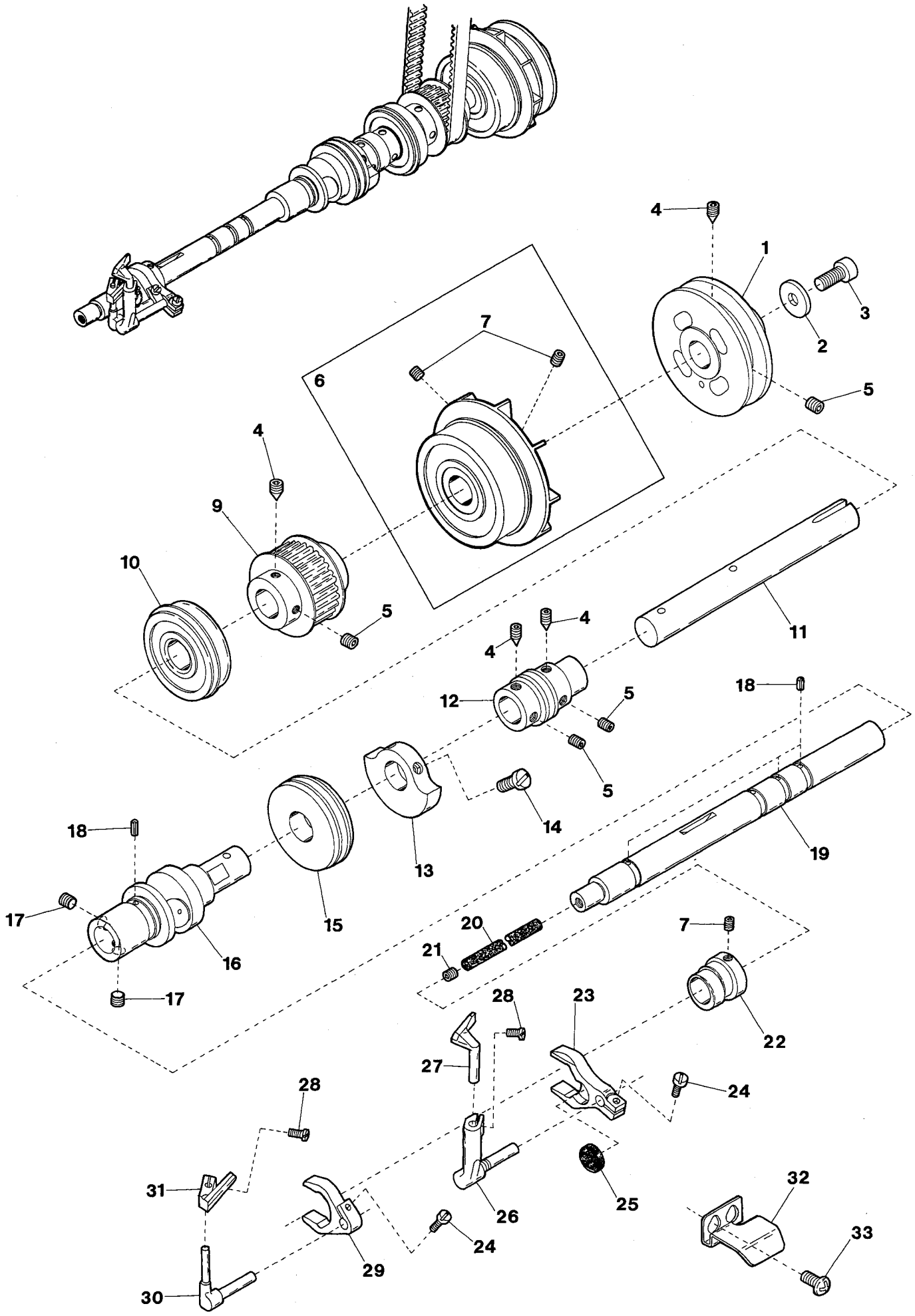
4
1
3
2
7
6
5
4
9
10
5
4
4
11
12
5
18
5
14
18
13
19
17
15
20
7
21
16
17
28
23
22
27
28
24
31
25
32
26
24
33
29
30

VG2700

| Ref.No | Parts No. | | Description | 品　名 | Amt. Req |
|---|---|---|---|---|---|
| 1 | 3500101 | | Pulley | プーリ | 1 |
| 2 | 300005 | | Washer | ワッシャ | 1 |
| 3 | 120012 | | Screw(M6-1 × 20) | 止ネジ | 1 |
| 4 | 160005 | | Screw(M6-1 × 8) | 止ネジ | 4 |
| 5 | 160007 | | Screw(M6-1 × 6) | 止ネジ | 4 |
| 6 | 3500104 | | Oil Cooling Fan Unit | 冷却ファン(組) | 1 |
| 7 | 160001 | | Screw(M4-0.7 × 4) | 止ネジ | 4 |
| 8 | | | | | |
| 9 | 3260010 | | Main Shaft Sprocket(Lower) | ベルトプーリ(下) | 1 |
| 10 | 3100131 | [0093090] | Ball Bearing(Middle) | ボールベアリング(中) | 1 |
| | | | | | |
| 11 | 3100132 | | Lower Shaft(Right) | 下軸(右) | 1 |
| 12 | 3100122 | | Oil Pump Driving Worm | ウォーム | 1 |
| 13 | 3100127 | | Counterweight(Small) | バランスウェイト(小) | 1 |
| 14 | 110009 | | Screw(M4-0.7 × 8) | 止ネジ | 2 |
| 15 | 3100123 | | Ball Bearing(Left) | ボールベアリング(左) | 1 |
| 16 | 3500109 | | Lower Shaft(Middle) | 下軸(中) | 1 |
| 17 | 160004 | | Screw(M6-1 × 4.8) | 止ネジ | 2 |
| 18 | 001107 | | Spring Pin(φ 2 × 6mm) | スプリングピン | 4 |
| 19 | 3500111 | | Lower Shaft(Left) | 下軸(左) | 1 |
| 20 | 310100 | | Oil Wick(φ 4.4 × 100mm) | 油芯 | 1 |
| | | | | | |
| 21 | 160003 | | Screw(M5-0.8 × 5) | 止ネジ | 1 |
| 22 | 3500165 | | Needle Guard Eccentric | 針受ケエキセン | 1 |
| 23 | 3500166 | | Needle Guard(Front) Lever | 針受ケ(前)腕 | 1 |
| 24 | 110022 | | Screw(M3-0.5 × 10) | 止ネジ | 2 |
| 25 | 3500413 | [3500409] | Felt | フェルト | 1 |
| 26 | 3100241 | | Needle Guard(Front) Holder | 針受ケ(前)台 | 1 |
| 27 | 3139200 | | Needle Guard(Front) | 針受ケ(前) | 1 |
| 28 | 110036 | | Screw(M3-0.5 × 6.5) | 止ネジ | 2 |
| 29 | 3500167 | | Needle Guard(Rear) Lever | 針受ケ(後)腕 | 1 |
| 30 | 3100245 | | Needle Guard(Rear) Holder | 針受ケ(後)台 | 1 |
| | | | | | |
| 31 | 3109201 | | Needle Guard(Rear) | 針受ケ(後) | 1 |
| 32 | 3500419 | | Needle Guard Lever Cover | 針受ケ腕カバー | 1 |
| 33 | 110012 | | Screw(M4-0.7 × 5) | 止ネジ | 2 |

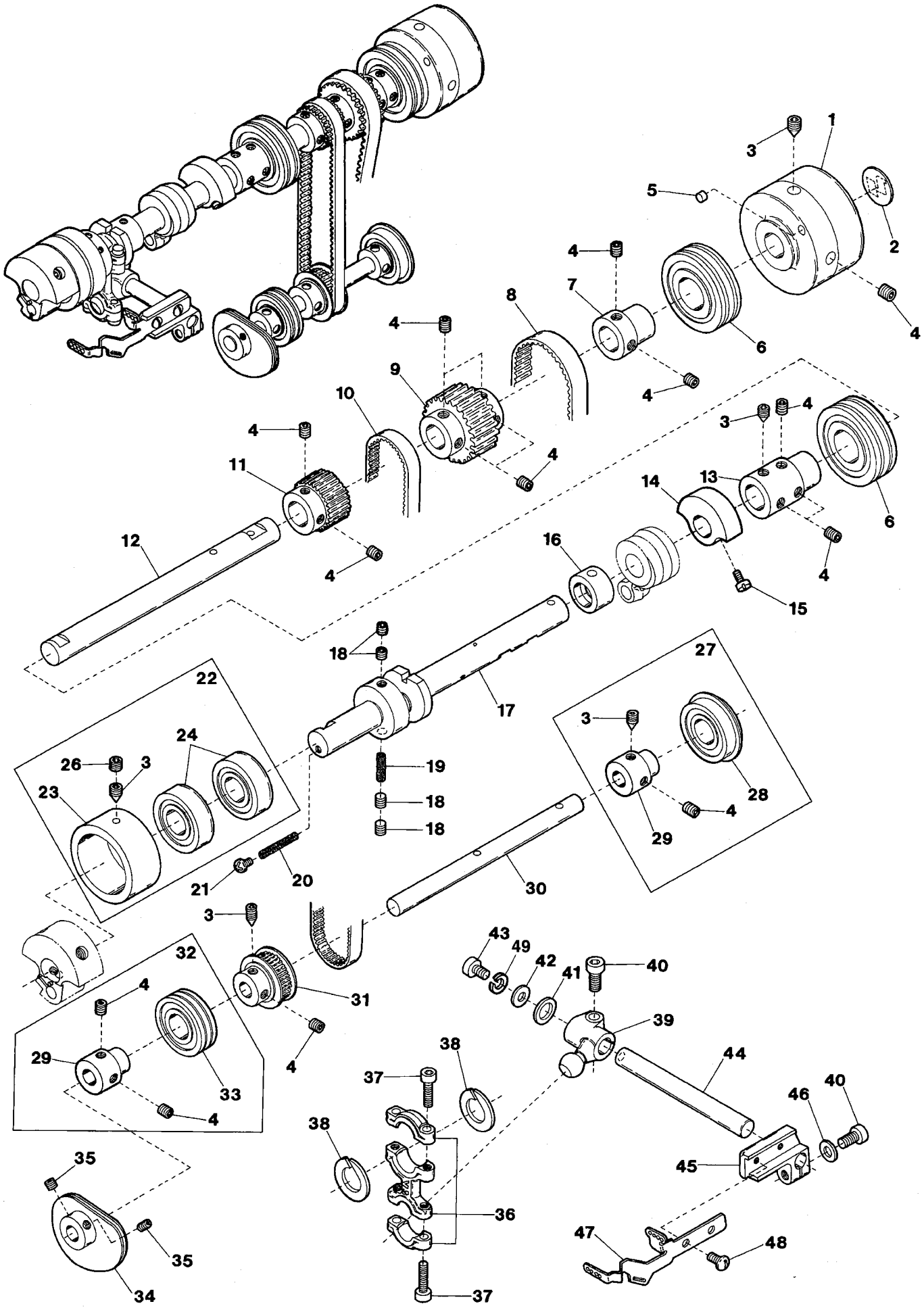
1
2
3
4
5
6
7
8
9
10
11
12
13
14
15
16
17
18
19
20
21
22
23
24
26
27
28
29
30
31
32
33
34
35
36
37
38
39
40
41
42
43
44
45
46
47
48
49

| Ref.No | Parts No. | | Description | 品　名 | Amt. Req |
|---|---|---|---|---|---|
| 1 | 3500051 | | Handwheel | ハンドホイール | 1 |
| 2 | 000989 | | Handwheel Mark | ハンドホイールマーク | 1 |
| 3 | 160005 | | Screw(M6-1 × 8) | 止ネジ | 5 |
| 4 | 160007 | | Screw(M6-1 × 6) | 止ネジ | 16 |
| 5 | 0092305 | | Magnet | マグネット | 1 |
| 6 | 3500054 | | Ball Bearing | ボールベアリング | 2 |
| 7 | 3100129 | | Handwheel Adapter | アダプタ | 1 |
| 8 | 3500056 | | Timing Belt(550-5GT-12) | タイミングベルト | 1 |
| 9 | 3260011 | | Upper Shaft Sprocket(Upper) | ベルトプーリ(上) | 1 |
| 10 | 3500069 | | Timing Belt(384-3GT-8) | タイミングベルト | 1 |
| 11 | 3500068 | | Upper Shaft Sprocket(Upper) | タイミングプーリ(上) | 1 |
| 12 | 3100275 | | Upper Shaft(Right) | 上軸(右) | 1 |
| 13 | 3100283 | | Upper Shaft Joint | 上軸継手 | 1 |
| 14 | 3100127 | | Counterweight(Small) | バランスウエイト(小) | 1 |
| 15 | 110009 | | Screw(M4-0.7 × 8) | 止ネジ | 2 |
| 16 | 3500403 | | Oil Sleeve | オイルスリーブ | 1 |
| 17 | 3500060 | | Upper Shaft(Left) | 上軸(左) | 1 |
| 18 | 160004 | | Screw(M6-1 × 4.8) | 止ネジ | 4 |
| 19 | 310101 | | Oil Wick(φ 5.1 × 15mm) | 油芯 | 1 |
| 20 | 310099 | | Oil Wick(φ 3.3 × 30mm) | 油芯 | 1 |
| 21 | 110012 | | Screw(M4-0.7 × 5) | 止ネジ | 1 |
| 22 | 3500062 | | Upper Shaft Sleeve, C. Set | 上軸スリーブ(組) | 1 |
| 23 | 3500064 | | Upper Shaft Sleeve | 上軸スリーブ | 1 |
| 24 | 0093154 | | Ball Bearing | ボールベアリング | 2 |
| 25 | | | | | |
| 26 | 160004 | | Screw(M6-1 × 4.8) | 止ネジ | 1 |
| 27 | 3500072 | | Adapter(Right), C. Set | アダプタ(右)(組) | 1 |
| 28 | 3500073 | | Ball Bearing | ボールベアリング | 1 |
| 29 | 3500076 | | Adapter | アダプタ | 2 |
| 30 | 3500071 | | Looper Thread Take-up Shaft | 糸繰リカム軸 | 1 |
| 31 | 3500070 | | Thread Take-up Shaft Sprocket(Lower) | ベルトプーリ(下) | 1 |
| 32 | 3500074 | | Adapter(Left), C. Set | アダプタ(左)(組) | 1 |
| 33 | 3500075 | | Ball Bearing | ボールベアリンク | 1 |
| 34 | 3500077 | | Looper Thread Take-up | ルーパ糸調子カム | 1 |
| 35 | 006212 | | Screw(M5-0.8 × 6) | 止ネジ | 2 |
| 36 | 3500079 | | Connecting Rod | 針糸繰リロッド | 1 |
| 37 | 120001 | [120049] | Screw(M4-0.7 × 14)[M4-0.7 × 16] | 止ネジ | 4 |
| 38 | 2100088 | | Connecting Rod Swing-proof | 振レ止メ | 2 |
| 39 | 3500066 | | Driving Lever | 針糸繰リ軸腕 | 1 |
| 40 | 120013 | | Screw(M6-1 × 15) | 止ネジ | 2 |
| 41 | 2100218 | | Driving Shaft Thrust Ring | スラストリング | 1 |
| 42 | 000555 | | Washer | ワッシャ | 1 |
| 43 | 120015 | | Screw(M5-0.8 × 10) | 止ネジ | 1 |
| 44 | 3500065 | | Driving Shaft | 針糸繰リ軸 | 1 |
| 45 | 3500067 | | Bracket | 針糸繰リ台 | 1 |
| 46 | 000667 | [000663] | Spring Washer | スプリングワッシャ | 1 |
| 47 | 3500278 | | Needle Thread Take-up | 針糸繰リ糸道 | 1 |
| 48 | 110106 | [110104] | Screw(M4-0.7 × 8)[M4-0.7 × 6] | 止ネジ | 2 |
| 49 | 000600 ◆ | | Spring Washer | スプリングワッシャ | 1 |

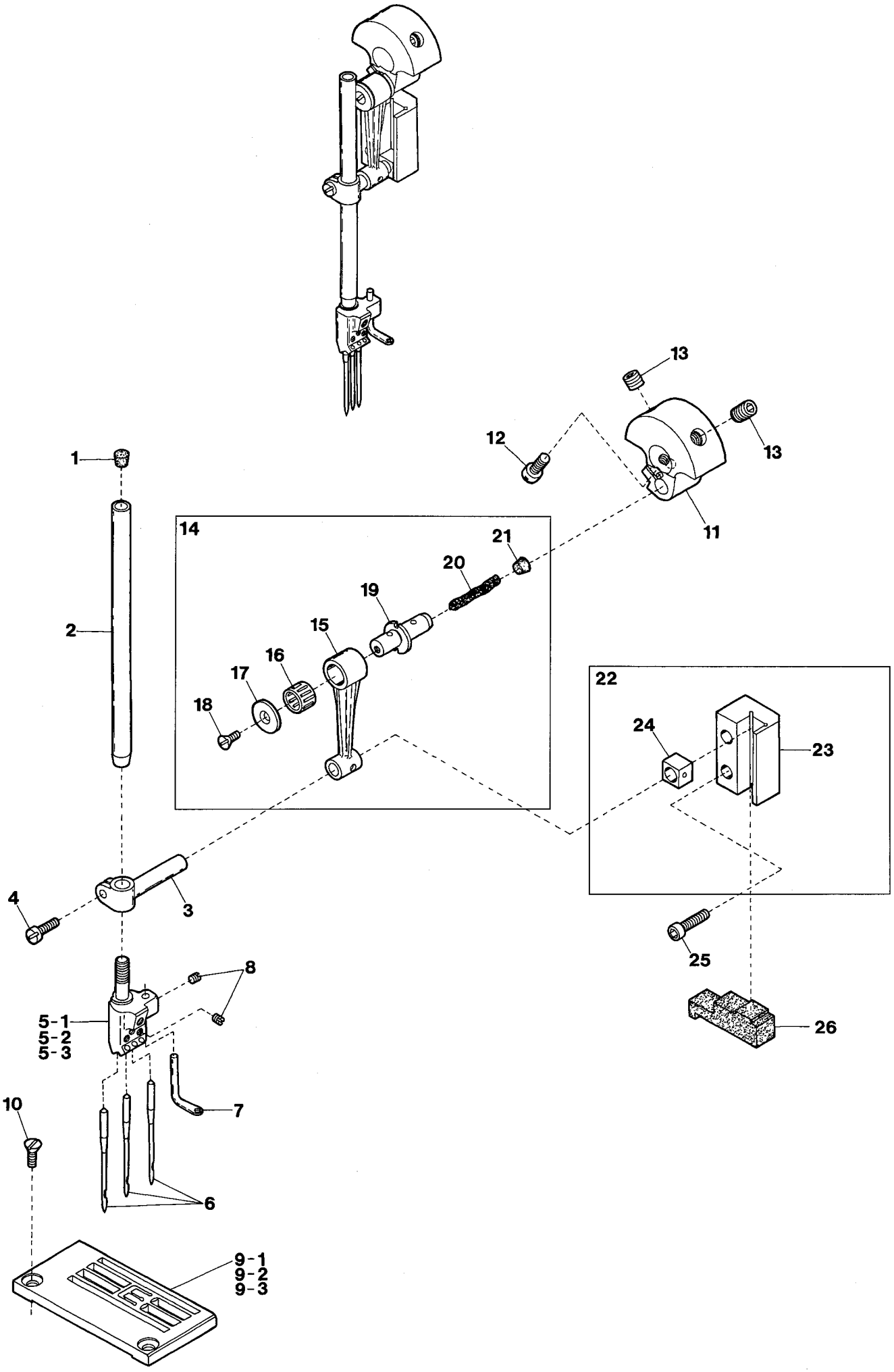
1
2
3
4
5-1
5-2
5-3
6
7
8
9-1
9-2
9-3
10
11
12
13
13
14
15
16
17
18
19
20
21
22
23
24
25
26

VG2700

| Ref.No | Parts No. | Description | 品　名 | Amt. Req |
|---|---|---|---|---|
| 1 | 330017 | Seal Plug | 詰栓 | 1 |
| 2 | 3500078 | Needle Bar | 針棒 | 1 |
| 3 | 3200111 | Needle Bar Bracket | 針棒抱キ | 1 |
| 4 | 110035 | Screw(M4-0.7 × 10) | 止ネジ | 1 |
| 5-1 | 0093356 | Needle Clamp(48) | 針止メ | 1 |
| 5-2 | 0093357 | Needle Clamp(56) | 針止メ | 1 |
| 5-3 | 0093358 | Needle Clamp(64) | 針止メ | 1 |
| 6 | ———— | Needle(UY × 128 GAS) | 針 | 3 |
| 7 | 0093365 | Top Cover Thread Eyelet | 飾リ糸道 | 1 |
| 8 | 001900 | Screw(1/8-44 × 2.4) | 止ネジ | 4 |
| 9-1 | 3508002 | Stitch Plate(48M) | 針板 | 1 |
| 9-2 | 3508003 | Stitch Plate(56M) | 針板 | 1 |
| 9-3 | 3508004 | Stitch Plate(64M) | 針板 | 1 |
| 10 | 009142 | Screw(9/64-40 × 4.8) | 止ネジ | 2 |
| | | | | |
| 11 | 3500615 | Counterweight | バランスウエイト | 1 |
| 12 | 110011 | Screw(M5-0.8 × 10) | 止ネジ | 2 |
| 13 | 160029 | Screw(M8-1.25 × 8) | 止ネジ | 2 |
| 14 | 3500091 | Connecting Rod, Complete Set | 針棒ロッド(組) | 1 |
| 15 | 3200112 | Connecting Rod | 針棒ロッド | 1 |
| 16 | 0093212 | Roller Bearing | ニードルベアリング | 1 |
| 17 | 3500617 | Eccentric Pin Plate | エキセンピンプレート | 1 |
| 18 | 130002 | Screw(M3-0.5 × 6) | 止ネジ | 1 |
| 19 | 3500616 | Eccentric Pin | 針棒エキセンピン | 1 |
| 20 | 000309 | Felt(2.5 × 3 × 30mm) | フェルト | 1 |
| | | | | |
| 21 | 330000 | Seal Plug | 詰栓 | 1 |
| 22 | 3200118 | Needle Bar Guide, C. Set | 針棒案内(組) | 1 |
| 23 | 3200116 | Needle Bar Guide | 針棒案内 | 1 |
| 24 | 0093186 | Slide Block | 針棒案内駒 | 1 |
| 25 | 009749 | Screw(M4-0.7 × 16) | 止ネジ | 2 |
| 26 | 3100338 | Sponge | 給油スポンジ | 1 |

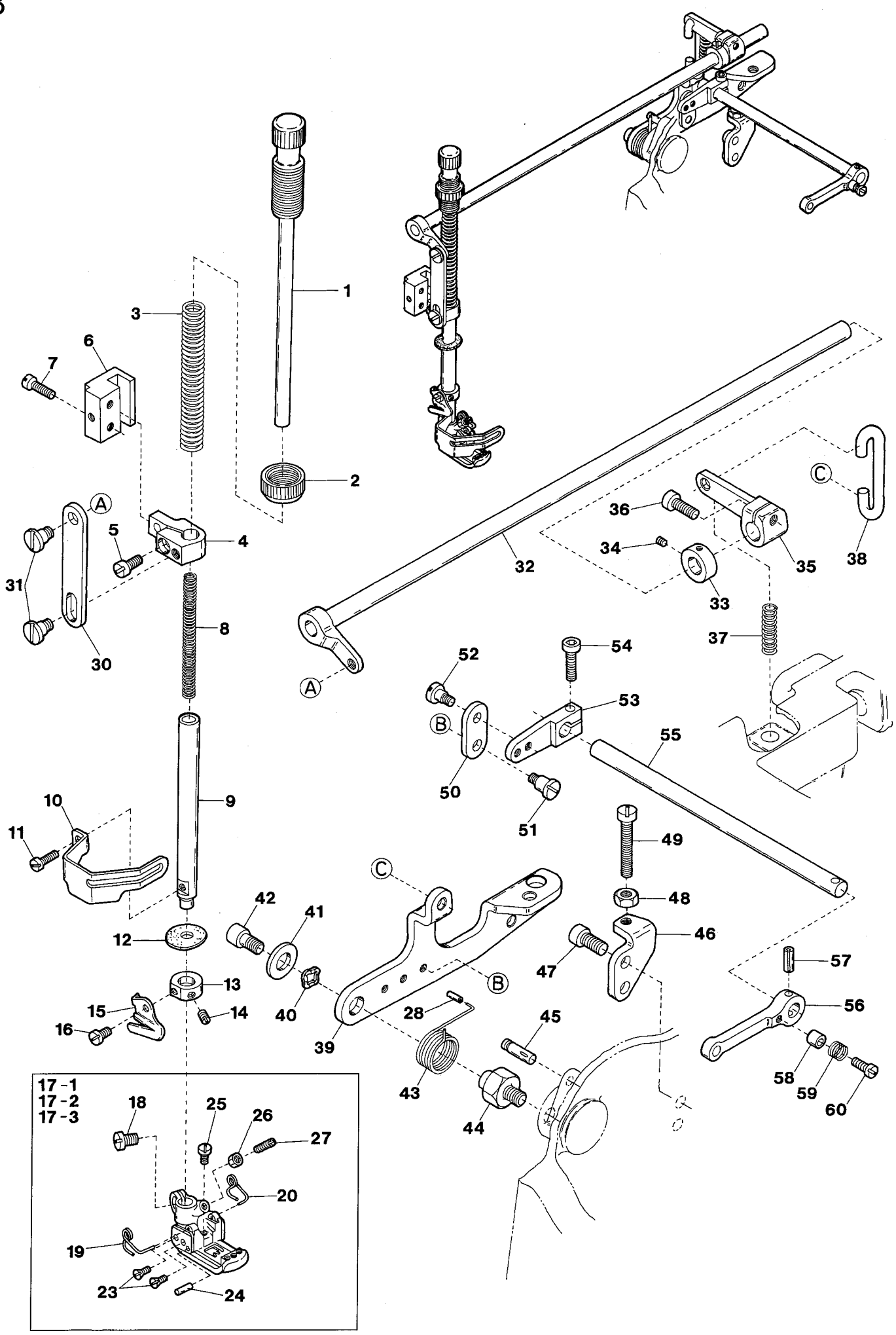
1
2
3
4
5
6
7
8
9
10
11
12
13
14
15
16
17-1
17-2
17-3
18
19
20
23
24
25
26
27
28
30
31
32
33
34
35
36
37
38
39
40
41
42
43
44
45
46
47
48
49
50
51
52
53
54
55
56
57
58
59
60
A
B
C

VG2700

| Ref.No | Parts No. | Description | 品　名 | Amt. Req |
|---|---|---|---|---|
| 1 | 0077270 | Presser Spring Regulator | 押工調節ネジ | 1 |
| 2 | 000445 | Lock Nut | ロックナット | 1 |
| 3 | 0065372 | Presser Bar Spring(Outer) | 押工棒バネ(太) | 1 |
| 4 | 3500304 | Presser Bar Connecting Brackst | 押工棒抱キ | 1 |
| 5 | 110031 | Screw(M4-0.7 × 12) | 止ネジ | 1 |
| 6 | 0093483 | Presser Bar Guide | 押工棒案内 | 1 |
| 7 | 004441 | Screw(11/64-40 × 16) | 止ネジ | 2 |
| 8 | 0060142 | Presser Bar Spring(Inner) | 押工棒バネ(細) | 1 |
| 9 | 3100110 | Presser Bar | 押工棒 | 1 |
| 10 | 3100112 | Finger Guard | フィンガガード | 1 |
| | | | | |
| 11 | 110002 | Screw(M3-0.5 × 5) | 止ネジ | 1 |
| 12 | 0093611 | Oil Protector Ring | 油切リリング | 1 |
| 13 | 3100310 | Collar(9 × 17 × 7mm) | カラー | 1 |
| 14 | 150001 | Screw(M4-0.7 × 4) | 止ネジ | 1 |
| 15 | 0020271 | Thread Chain Cutting Knife | チェインカッタ | 1 |
| 16 | 110054 | Screw(M3-0.5 × 3.5) | 止ネジ | 1 |
| 17-1 | 3507050 | Presser Foot, C. Set(48) | 押工(組) | 1 |
| 17-2 | 3507052 | Presser Foot, C. Set(56) | 押工(組) | 1 |
| 17-3 | 3507054 | Presser Foot, C. Set(64) | 押工(組) | 1 |
| 18 | 110004 | Screw(M3.5-0.6 × 8) | 止ネジ | 1 |
| 19 | 3107303 | Presser Foot Spring(Left) | 小押エバネ(左) | 1 |
| 20 | 3107304 | Presser Foot Spring(Right) | 小押エバネ(右) | 1 |
| | | | | |
| 21 | | | | |
| 22 | | | | |
| 23 | 130016 | Screw(M2.5-0.45 × 6) | 止ネジ | 4 |
| 24 | 3107306 | Presser Foot Hinge Pin(56, 64) | 押エヒンジピン | 1 |
| 25 | 110084 | Screw(M3.5-0.5 × 4.2) | 止ネジ | 1 |
| 26 | 000327 | Lock Nut | ロックナット | 1 |
| 27 | 260006 | Adjusting Screw(1/8-44 × 9.5) | 調節ネジ | 1 |
| 28 | 3500305 | Cap | キャップ | 1 |
| 29 | | | | |
| 30 | 3500296 | Presser Foot Lifter | 押工吊リ | 1 |
| | | | | |
| 31 | 170041 | Screw(M5-0.8 × 3.5) | 止ネジ | 2 |
| 32 | 3500300 | Lifter Shaft | 押工揚ゲ軸 | 1 |
| 33 | 2100267 | Collar(10 × 17 × 8mm) | カラー | 1 |
| 34 | 160001 | Screw(M4-0.7 × 4) | 止ネジ | 2 |
| 35 | 3500293 | Lifter Shaft Lever | 押工揚ゲ軸レバー | 1 |
| 36 | 005650 | Screw(M5-0.8 × 14) | 止ネジ | 1 |
| 37 | 0068181 | Spring | バネ | 1 |
| 38 | 3500294 | Lever Link | レバーリンク | 1 |
| 39 | 3500291 | Lifter Lever | 押工揚ゲレバー | 1 |
| 40 | 000487 | Wave Washer | 波形ワッシャ | 1 |

Ref. No. 41 to 60　See the following page.

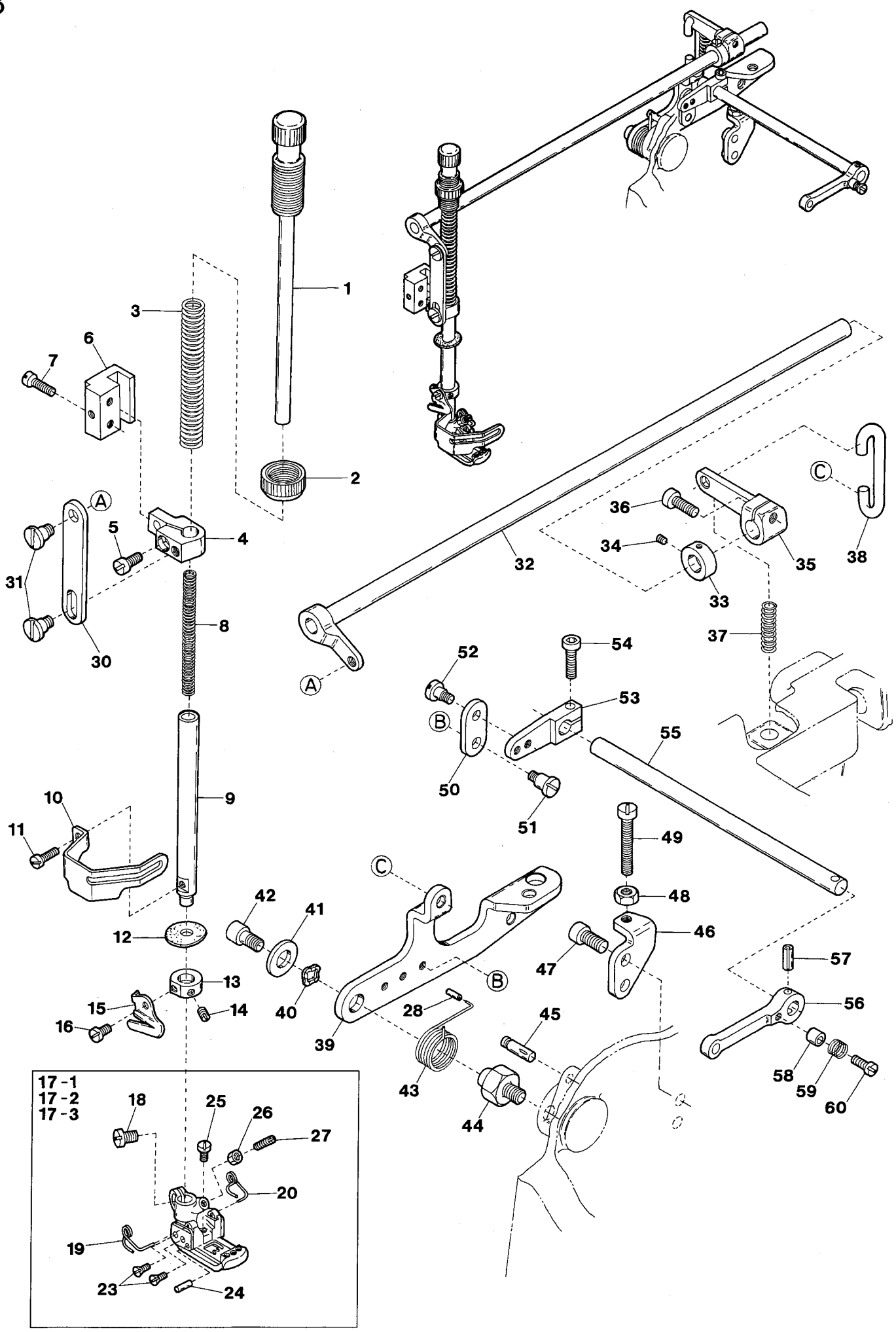
1
2
3
4
5
6
7
8
9
10
11
12
13
14
15
16
17-1
17-2
17-3
18
19
20
23
24
25
26
27
28
30
31
32
33
34
35
36
37
38
39
40
41
42
43
44
45
46
47
48
49
50
51
52
53
54
55
56
57
58
59
60
A
B
C

| Ref.No | Parts No. | | Description | 品　名 | Amt. Req |
|---|---|---|---|---|---|
| 41 | 300005 | | Washer | ワッシャ | 1 |
| 42 | 120010 | | Screw(M6-1 × 10) | 止ネジ | 1 |
| 43 | 2110361 | | Spring | バネ | 1 |
| 44 | 2100194 | | Lifter Lever Holder | 押工揚ゲレバー台 | 1 |
| 45 | 340003 | | Knock Pin(φ5 × 20mm) | ノックピン | 1 |
| 46 | 3500295 | | Lifter Lever Stopper | 押工揚ゲレバーストッパ | 1 |
| 47 | 120006 | | Screw(M6-1 × 12) | 止ネジ | 2 |
| 48 | 000206 | | Lock Nut | ロックナット | 1 |
| 49 | 110118 | [110021] | Screw(M5-0.8 × 22)[M5-0.8 × 18] | 止ネジ | 1 |
| 50 | 3500299 | | Tension Release Lever Connector | 糸緩メ腕連結板 | 1 |
| | | | | | |
| 51 | 170038 | | Screw(M4-0.7 × 5) | 止ネジ | 1 |
| 52 | 170009 | | Screw(M4-0.7 × 4) | 止ネジ | 1 |
| 53 | 3100533 | | Tension Release Lever | 糸緩メ腕 | 1 |
| 54 | 120001 | | Screw(M4-0.7 × 14) | 止ネジ | 1 |
| 55 | 3500292 | | Tension Release Shaft | 糸緩メ軸 | 1 |
| 56 | 0063515 | | Thread Pull-off Lever | 糸緩メレバー | 1 |
| 57 | 000690 | | Spring Pin(4 × 16mm) | スプリングピン | 1 |
| 58 | 0094390 | | Tension Release Adjusting Eccentric | 糸緩メ板調節コロ | 1 |
| 59 | 0095334 | | Swing-proof Spring | 防振バネ | 1 |
| 60 | 001170 | | Screw(9/64-40 × 12) | 止ネジ | 1 |

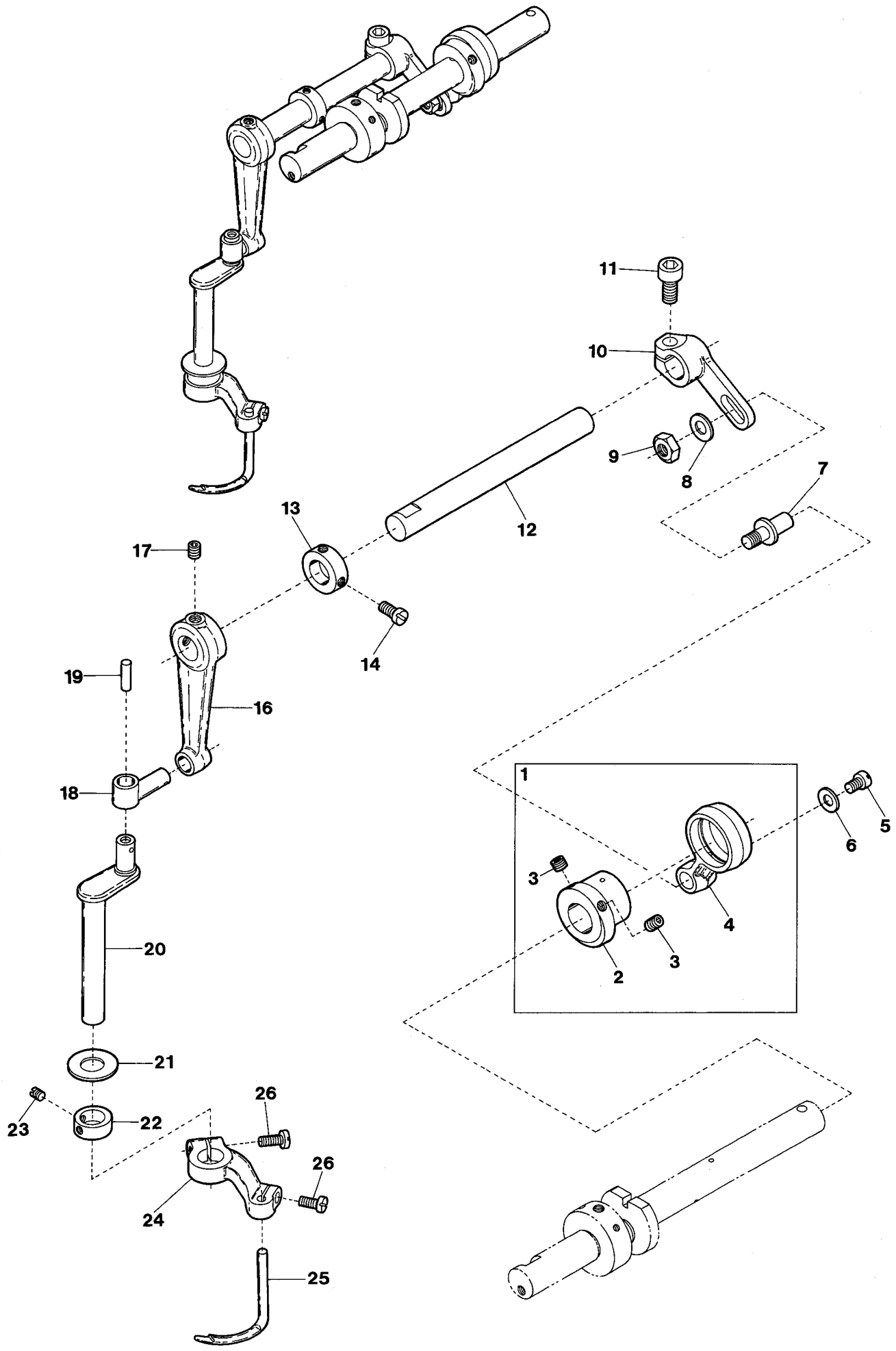


VG2700

| Ref.No | Parts No. | | Description | 品　名 | Amt. Req |
|---|---|---|---|---|---|
| 1 | 3500081 | | Spreader Eccentric, C. Set | 飾リエキセン(組) | 1 |
| 2 | 3500082 | | Spreader Eccentric | 飾リエキセン | 1 |
| 3 | 160003 | | Screw(M5-0.8 × 5) | 止ネジ | 2 |
| 4 | 3500084 | | Spreader Connecting Rod | 飾リロッド | 1 |
| 5 | 110009 | | Screw(M4-0.7 × 8) | 止ネジ | 1 |
| 6 | 300006 | | Washer | ワッシャ | 1 |
| 7 | 3100309 | | Adjusting Lever Pin | 調節レバーピン | 1 |
| 8 | 000528 | | Washer | ワッシャ | 1 |
| 9 | 100003 | | Nut | ナット | 1 |
| 10 | 3500086 | | Spreader Adjusting Lever | 飾リ調節レバー | 1 |
| | | | | | |
| 11 | 120013 | | Screw(M6-1 × 15) | 止ネジ | 1 |
| 12 | 3160138 | | Driving Shaft | ルーパ軸 | 1 |
| 13 | 0032646 | | Collar(12 × 20 × 8mm) | カラー | 1 |
| 14 | 009604 | | Screw(11/64-40 × 5.5) | 止ネジ | 2 |
| 15 | | | | | |
| 16 | 3100305 | | Rocking Arm | ルーパ振リ腕 | 1 |
| 17 | 160007 | | Screw(M6-1 × 6) | 止ネジ | 2 |
| 18 | 0063051 | | Rocking Pin | ルーパ振リピン | 1 |
| 19 | 310094 | | Oil Wick(φ 3.3 × 15mm) | 油芯 | 1 |
| 20 | 0063053 | | Spreader Bar | ルーパ棒 | 1 |
| | | | | | |
| 21 | 0063056 | | Bushing Ring | ブッシュリング | 1 |
| 22 | 0063057 | | Collar(10 × 18 × 7mm) | カラー | 1 |
| 23 | 009526 | | Screw(9/64-40 × 4.4) | 止ネジ | 2 |
| 24 | 3100307 | | Spreader Holder | 飾リ糸ルーパ台 | 1 |
| 25 | 3509320 | [3109310] | Spreader | 飾リ糸ルーパ | 1 |
| 26 | 110031 | | Screw(M4-0.7 × 12) | 止ネジ | 2 |

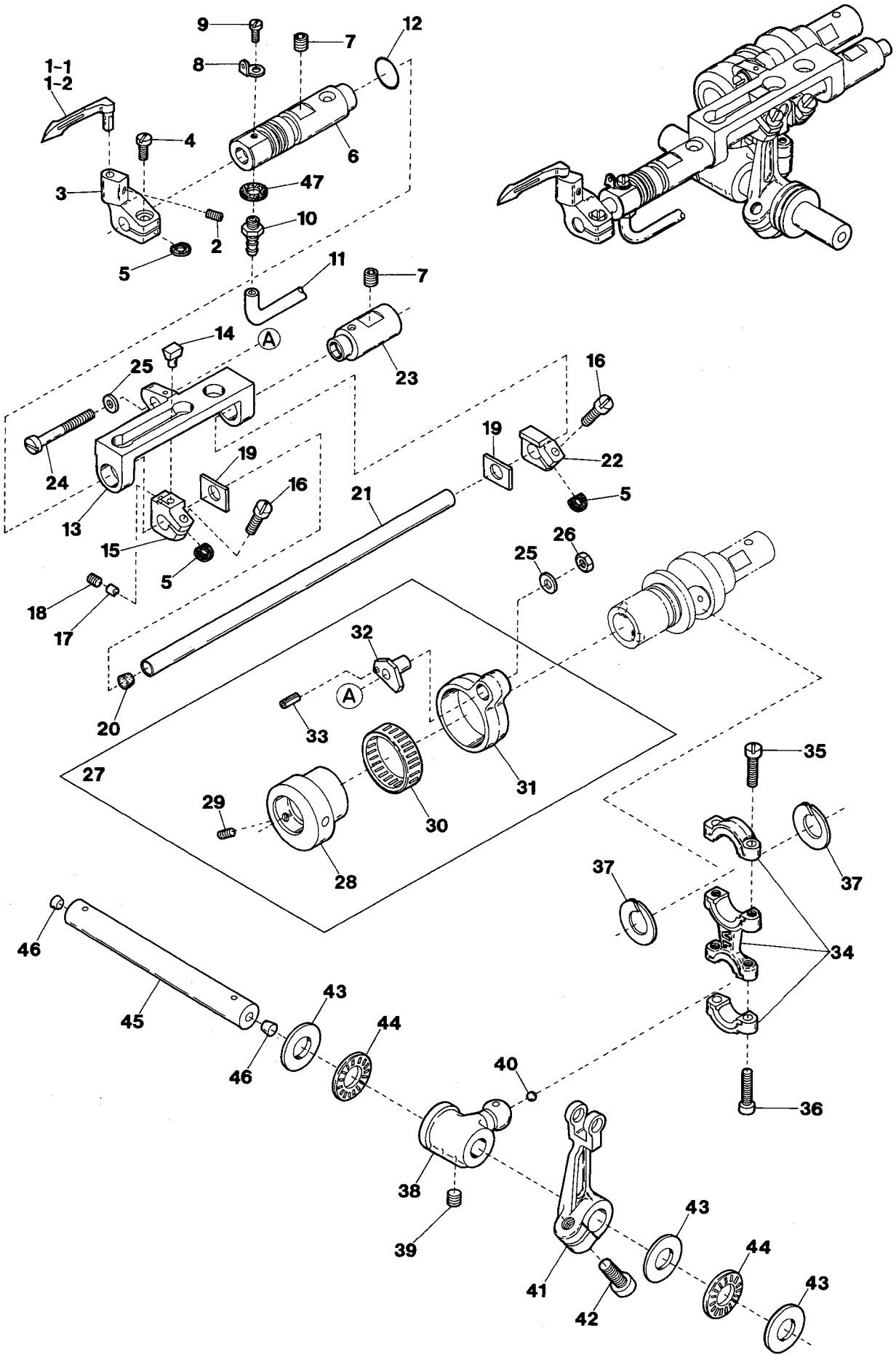
9
7
12
8
1-1
1-2
4
6
3
47
10
2
5
11
7
14
A
23
25
16
24
19
22
19
16
21
5
13
15
5
26
25
18
17
32
A
20
33
35
27
31
29
30
28
37
37
46
34
45
43
44
46
40
36
38
39
43
44
41
42
43

VG2700

| Ref.No | Parts No. | | Description | 品　名 | Amt. Req |
|---|---|---|---|---|---|
| 1-1 | 3109300 | | Looper(32, 40, 56, 64) | ルーパ | 1 |
| 1-2 | 3109302 | | Looper(48) | ルーパ | 1 |
| 2 | 160040 | [110020] | Screw(M4-0.7 × 5)[M3.5-0.6 × 6] | 止ネジ | 1 |
| 3 | 3180100 | [3100555] | Looper Holder | ルーパ台 | 1 |
| 4 | 110039 | | Screw(M3.5-0.6 × 10) | 止ネジ | 1 |
| 5 | 300500 | | Spacer(Fiber) | スペーサ(ファイバ) | 3 |
| 6 | 3500175 | | Looper Bar Bushing(Left) | ルーパ棒ブッシュ(左) | 1 |
| 7 | 160024 | | Screw(M6-1 × 8) | 止ネジ | 2 |
| 8 | 3500274 | | Looper Thread Eyelet(Left) | ルーパ糸道(左) | 1 |
| 9 | 110101 | | Screw(M3-0.5 × 3) | 止ネジ | 1 |
| 10 | 0010017 | | Bamboo Joint | バンブ継手 | 1 |
| | | | | | |
| 11 | 3500426 | | Oil Tube(3 × 5 × 110mm) | オイルチューブ | 1 |
| 12 | 3100205 | | O-ring | Oリング | 1 |
| 13 | 3500179 | | Looper Bar Guide | ルーパ棒ガイド | 1 |
| 14 | 3100157 | | Slider | スライダ | 1 |
| 15 | 3100158 | | Slider Holder | スライダ取付台 | 1 |
| 16 | 110005 | | Screw(M3.5-0.6 × 12) | 止ネジ | 2 |
| 17 | 3100159 | | Slider Presser | スライダ押シ | 1 |
| 18 | 160001 | | Screw(M4-0.7 × 4) | 止ネジ | 1 |
| 19 | 3500180 | | Thrust Washer | スラストワッシャ | 2 |
| 20 | 330016 | | Seal Plug | 詰栓 | 1 |
| | | | | | |
| 21 | 3500177 | | Looper Bar | ルーパ棒 | 1 |
| 22 | 3500178 | | Slide Block | スライドブロック | 1 |
| 23 | 3500176 | | Looper Bar Bushing(Right) | ルーパ棒ブッシュ(右) | 1 |
| 24 | 110019 | | Screw(M5-0.8 × 35) | 止ネジ | 1 |
| 25 | 300000 | | Washer | ワッシャ | 2 |
| 26 | 100002 | | Nut | ナット | 1 |
| 27 | 3100150 | | Looper Rocker Connecting Rod, C. Set | ルーパ前後ロッド(組) | 1 |
| 28 | 3100147 | | Looper Rocker Regulating Eccentric | ルーパ前後エキセン | 1 |
| 29 | 160003 | | Screw(M5-0.8 × 5) | 止ネジ | 1 |
| 30 | 0065389 | | Roller Bearing | ニードルベアリング | 1 |
| | | | | | |
| 31 | 3100149 | | Looper Rocker Connecting Rod | ルーパ前後ロッド | 1 |
| 32 | 3100151 | | Looper Rocker Adjusting Pin | ルーパ前後調節ピン | 1 |
| 33 | 340001 | | Spring Pin(φ 1.5 × 4mm) | スプリングピン | 1 |
| 34 | 3500171 | | Looper Connecting Rod | ルーパロッド | 1 |
| 35 | 110043 | | Screw(M4-0.7 × 14) | 止ネジ | 2 |
| 36 | 120049 | | Screw(M4-0.7 × 16) | 止ネジ | 2 |
| 37 | 2110191 | | Connecting Rod Swing-proof | 振レ止メ | 2 |
| 38 | 3100142 | | Looper Driving Lever | ルーパ軸腕 | 1 |
| 39 | 160029 | [160024] | Screw(M8-1.25 × 8)[M6-1 × 8] | 止ネジ | 2 |
| 40 | 000637 | | Seal Plug | 詰栓 | 1 |
| | | | | | |
| 41 | 3500174 | | Looper Rocker Arm | ルーパ振リ腕 | 1 |
| 42 | 120013 | | Screw(M6-1 × 15) | 止ネジ | 1 |
| 43 | 3100146 | | Thrust Washer | スラストワッシャ | 3 |
| 44 | 3100145 | | Thrust Roller Bearing | スラストベアリング | 2 |
| 45 | 3500172 | | Looper Shaft | ルーパ軸 | 1 |
| 46 | 000740 | | Seal Plug | 詰栓 | 2 |
| 47 | 000623 | | Gasket | パッキン | 1 |

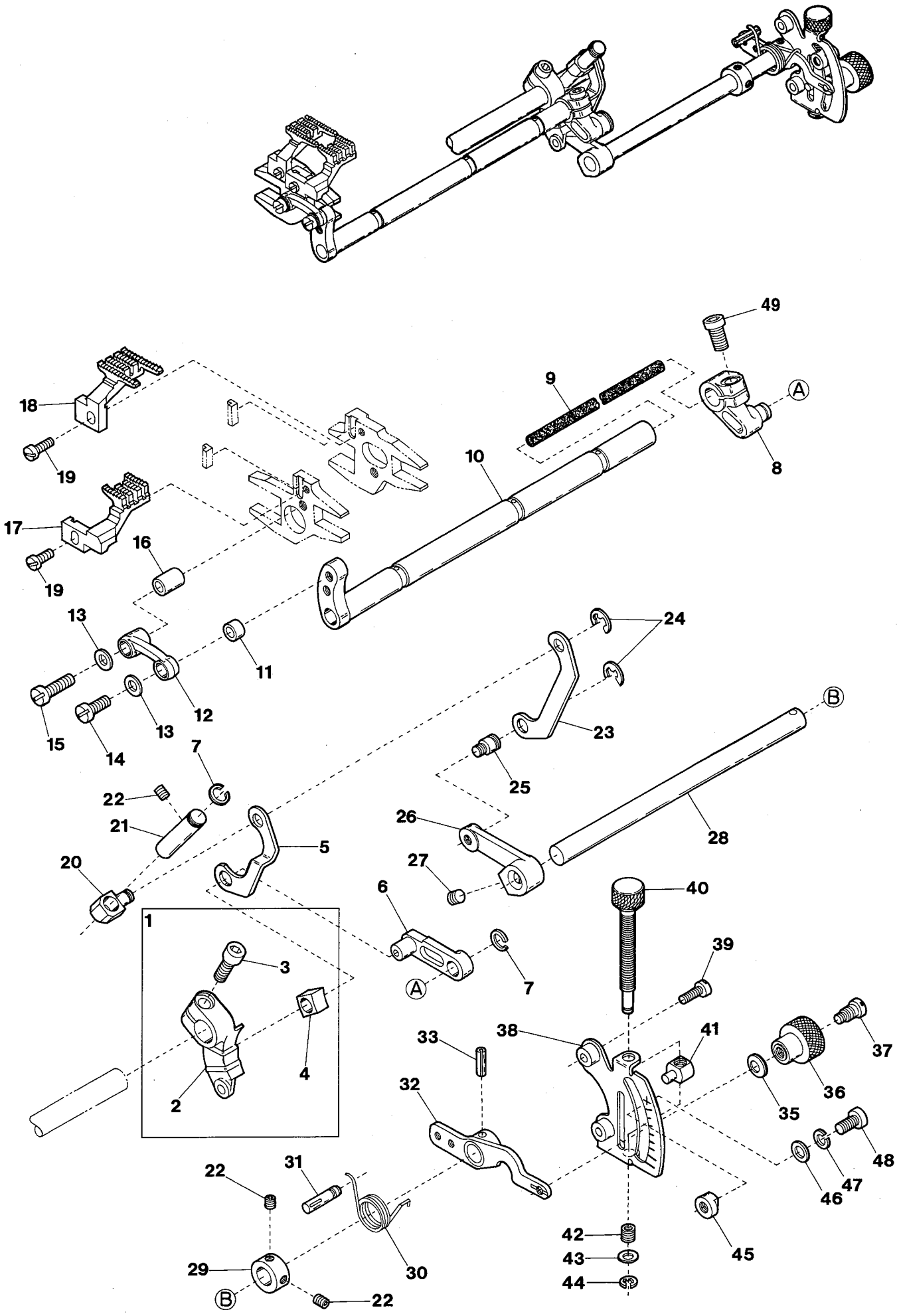
49
9
A
8
18
19
10
17
16
19
13
24
11
12
13
15
14
23
B
7
25
22
21
26
28
5
20
27
6
40
1
3
A
7
39
33
38
41
37
4
36
2
32
35
48
22
31
47
46
42
45
43
29
30
44
B
22

VG2700

| Ref.No | Parts No. | | Description | 品　名 | Amt. Req |
|---|---|---|---|---|---|
| 1 | 3500147 | | Differential Feed Rocker Arm, C. Set | 前送り調節腕(組) | 1 |
| 2 | 3500148 | | Differential Feed Rocker Arm | 前送り調節腕 | 1 |
| 3 | 120013 | | Screw(M6-1 × 15) | 止ネジ | 1 |
| 4 | 3500149 | | Differential Regulating Slider | 前送り調節スライダ | 1 |
| 5 | 3500152 | | Differential Link | 差動リンク | 1 |
| 6 | 3500154 | | Differential Feed Regulating Link | 前送り調節リンク | 1 |
| 7 | 3200215 | | Retaining Ring | ストップリング | 2 |
| 8 | 3500146 | | Differential Feed Shaft Arm | 前送り軸腕 | 1 |
| 9 | 310096 | | Oil Wick(φ 5 × 130mm) | 油芯 | 1 |
| 10 | 3500144 | | Differential Feed Shaft | 前送り軸 | 1 |
| 11 | 2100249 | | Connection Bushing(Front) | 前送りリンクブッシュ(前) | 1 |
| 12 | 3500143 | | Differential Feed Bar Connection | 前送りリンク | 1 |
| 13 | 300000 | | Washer | ワッシャ | 2 |
| 14 | 110046 | | Screw(M5-0.8 × 12) | 止ネジ | 1 |
| 15 | 110021 | | Screw(M5-0.8 × 18) | 止ネジ | 1 |
| 16 | 3500142 | | Connection Bushing(Rear) | 前送りリンクブッシュ(後) | 1 |
| 17 | 3509004 | | Differential Feed Dog | 前送り | 1 |
| 18 | 3509005 | | Main Feed Dog | 後送り | 1 |
| 19 | 110004 | | Screw(M3.5-0.6 × 8) | 止ネジ | 2 |
| 20 | 3500151 | | Linear Block | リニアブロック | 1 |
| 21 | 3500150 | | Linear Guide | リニアガイド | 1 |
| 22 | 160001 | | Screw(M4-0.7 × 4) | 止ネジ | 3 |
| 23 | 3500153 | | Linear Link | リニアリンク | 1 |
| 24 | 0068202 | | Retaining Ring | ストップリング | 2 |
| 25 | 2100253 | | Linear Link Pin | リニアリンクピン | 1 |
| 26 | 3500155 | | Differential Feed Lever(Left) | 差動レバー(左) | 1 |
| 27 | 160004 | [160007] | Screw(M6-1 × 4.8)[M6-1 × 6] | 止ネジ | 1 |
| 28 | 3500156 | | Differential Feed Lever Shaft | 差動レバー軸 | 1 |
| 29 | 2100267 | | Collar(10 × 17 × 18mm) | カラー | 1 |
| 30 | 3500157 | | Spring | バネ | 1 |
| 31 | 340003 | | Knock Pin(φ 5 × 20mm) | ノックピン | 1 |
| 32 | 3500158 | | Differential Feed Lever(Right) | 差動レバー(右) | 1 |
| 33 | 000690 | | Spring Pin(φ 4 × 16mm) | スプリングピン | 1 |
| 34 | | | | | |
| 35 | 000010 | | Conical Spring Washer | 皿バネワッシャ | 1 |
| 36 | 3500161 | | Lock Nut | ロックナット | 1 |
| 37 | 190004 | | Screw(M6-1 × 8.5, M4.5-0.5 × 3) | 止ネジ | 1 |
| 38 | 3500160 | | Differential Feed Graduations | 差動目盛板 | 1 |
| 39 | 110045 | | Screw(M4-0.7 × 12) | 止ネジ | 2 |
| 40 | 3101754 | | Adjusting Screw | アジャスタ | 1 |
| 41 | 2100264 | | Adjusting Block | アジャスタ駒 | 1 |
| 42 | 2100259 | | Spring | バネ | 1 |
| 43 | 001123 | | Washer | ワッシャ | 1 |
| 44 | 0034293 | | Retaining Ring | ストップリング | 1 |
| 45 | 0020350 | | Differential Feed Lever Stopper | 差動レバーストッパ | 1 |
| 46 | 000669 | | Washer | ワッシャ | 1 |
| 47 | 000600 | | Spring Washer | スプリングワッシャ | 1 |
| 48 | 005049 | | Screw(M5-0.8 × 8) | 止ネジ | 1 |
| 49 | 120011 | | Screw(M6-1 × 18) | 止ネジ | 1 |

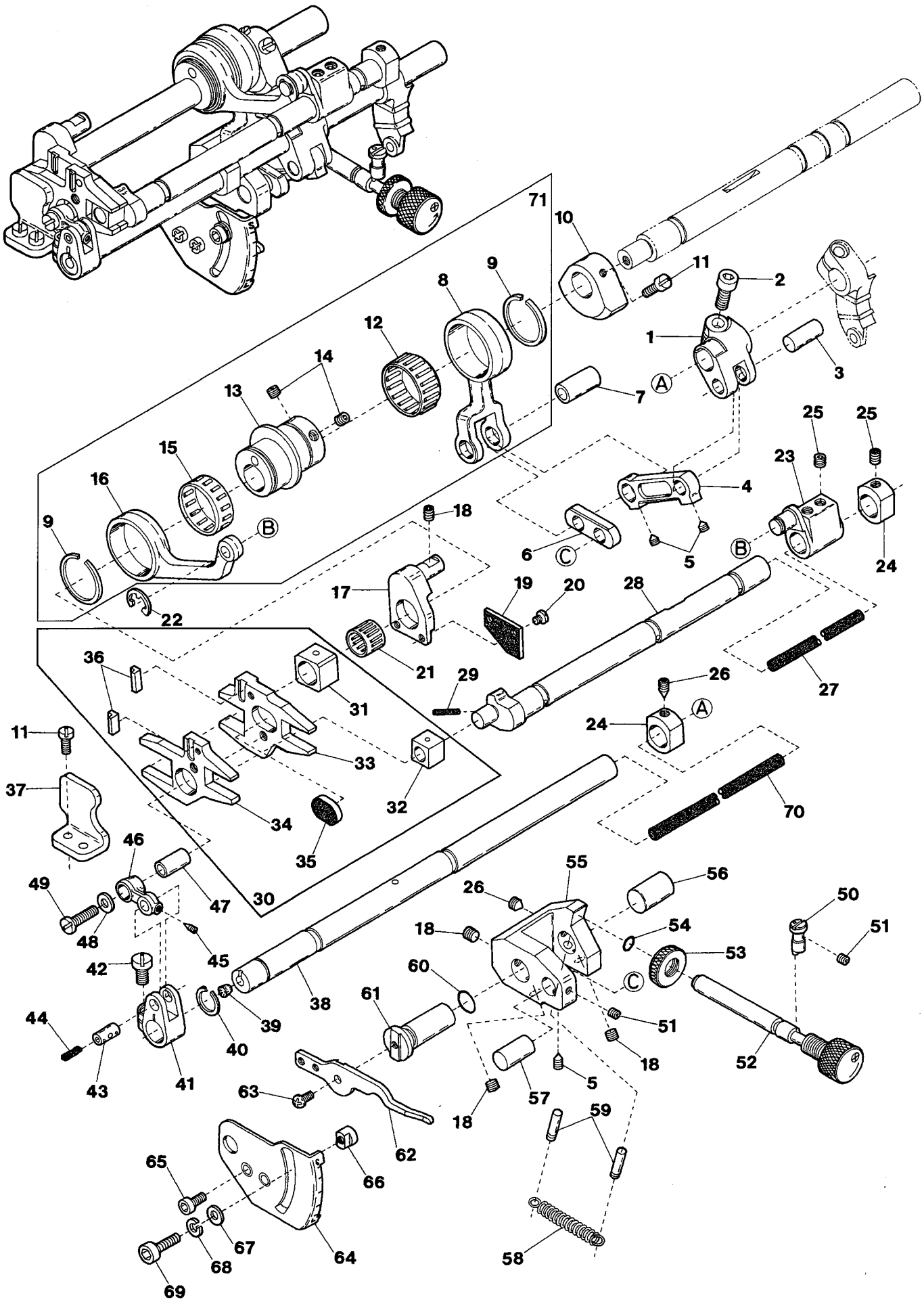
71
10
11
2
9
8
12
1
3
14
13
7
A
25
25
15
23
16
4
9
B
18
6
C
5
B
24
17
19
20
28
22
21
29
26
27
36
31
24
A
11
33
37
32
34
70
35
46
55
56
49
47
30
26
50
48
18
54
51
45
53
42
60
C
38
61
51
44
39
40
18
52
43
41
63
57
5
18
59
62
65
66
67
64
58
68
69

VG2700

| Ref.No | Parts No. | | Description | 品　名 | Amt. Req |
|---|---|---|---|---|---|
| 1 | 3500131 | | Feed Bar Driving Shaft Lever | 送り軸腕 | 1 |
| 2 | 120013 | | Screw(M6-1 × 15) | 止ネジ | 1 |
| 3 | 3500130 | | Feed Bar Link Pin | 送りリンクピン | 1 |
| 4 | 3500129 | | Feed Bar Link(Long) | 送りリンク(長) | 1 |
| 5 | 160002 | | Screw(M4-0.7 × 5) | 止ネジ | 3 |
| 6 | 3100195 | | Feed Bar Link(Short) | 送りリンク(短) | 1 |
| 7 | 3100193 | | Feed Bar Connecting Rod Pin | 送りロッドピン | 1 |
| 8 | 3500128 | | Feed Bar Connecting Rod | 送りロッド | 1 |
| 9 | 3100192 | | Retaining Ring | ストップリング | 2 |
| 10 | 3500105 | | Counterweight | バランスウエイト | 1 |
| | | | | | |
| 11 | 110009 | | Screw(M4-0.7 × 8) | 止ネジ | 4 |
| 12 | 3100623 | | Roller Bearing | ニードルベアリング | 1 |
| 13 | 3500127 | | Main Feed Eccentric | 送りエキセン | 1 |
| 14 | 006212 | | Screw(M5-0.8 × 6) | 止ネジ | 2 |
| 15 | 3100190 | | Roller Bearing | ニードルベアリング | 1 |
| 16 | 3500162 | | Feed Lift Connecting Rod | 送り上下ロッド | 1 |
| 17 | 3500119 | | Feed Bar Guide(Right) | 送り台ガイド(右) | 1 |
| 18 | 160007 | | Screw(M6-1 × 6) | 止ネジ | 4 |
| 19 | 3500411 | | Oiling Felt | 給油フェルト | 1 |
| 20 | 110030 | | Screw(M3-0.5 × 2.6) | 止ネジ | 2 |
| | | | | | |
| 21 | 3201355 | | Roller Bearing | ニードルベアリング | 1 |
| 22 | 0013208 | [0068202] | Retaining Ring | ストップリング | 1 |
| 23 | 3500163 | | Feed Lift Shaft Lever | 送り上下軸腕 | 1 |
| 24 | 3500124 | | Collar(12 × 20 × 10mm) | カラー | 2 |
| 25 | 160004 | | Screw(M6-1 × 4.8) | 止ネジ | 3 |
| 26 | 160005 | | Screw(M6-1 × 8) | 止ネジ | 2 |
| 27 | 310096 | | Oil Wick(φ 5 × 130mm) | 油芯 | 1 |
| 28 | 3500164 | | Feed Lift Shaft | 送り上下軸 | 1 |
| 29 | 000397 | | Oil Wick(φ 2 × 11mm) | 油芯 | 1 |
| 30 | 3500113 | | Feed Bar, Complete Set | 送り台(組) | 1 |
| | | | | | |
| 31 | 3500116 | [3500146] | Feed Lift Block(Rear) | 角駒(後) | 1 |
| 32 | 0032867 | | Feed Lift Block(Front) | 角駒(前) | 1 |
| 33 | 3500115 | | Main Feed Bar | 後送り台 | 1 |
| 34 | 3500114 | | Differential Feed Bar | 前送り台 | 1 |
| 35 | 3500408 | | Oiling Felt | 給油フェルト | 1 |
| 36 | 3100231 | | Feed Dog Key | キー | 2 |
| 37 | 3500118 | | Feed Bar Guide(Left) | 送り台ガイド(左) | 1 |
| 38 | 3500122 | | Main Feed Bar Driving Shaft | 後送り軸 | 1 |
| 39 | 000750 | | Seal Plug | 詰栓 | 1 |
| 40 | 2020002 | | Retaining Ring | ストップリング | 1 |

Ref. No. 41 to 71　See the following page.

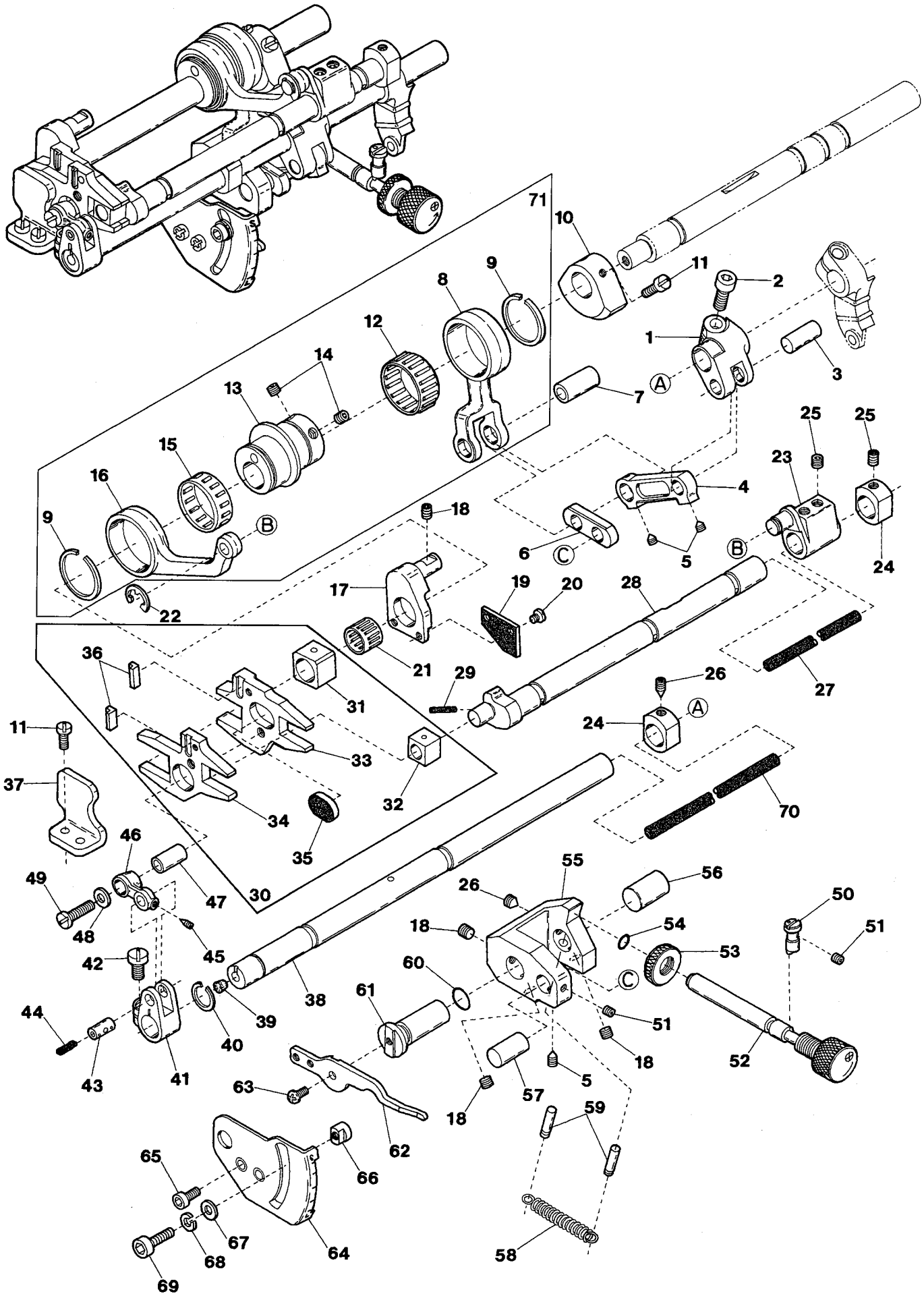
71
10
11
2
9
8
12
1
14
3
13
7
A
25
25
15
23
16
4
9
18
B
6
C
5
B
24
17
19
20
28
22
21
36
29
26
27
31
24
A
11
33
37
32
34
70
35
46
55
56
49
47
30
26
50
48
18
54
51
45
53
42
60
C
38
61
39
44
40
51
18
52
43
41
63
57
5
18
59
62
65
66
67
68
64
58
69

| Ref.No | Parts No. | | Description | 品　名 | Amt. Req |
|---|---|---|---|---|---|
| 41 | 3500123 | | Main Feed Bar Driving Shaft Lever | 後送り軸腕 | 1 |
| 42 | 110117 | | Screw(M5-0.8 × 9.5) | 止ネジ | 1 |
| 43 | 3100214 | | Link Pin | リンクピン | 1 |
| 44 | 000199 | | Oil Wick(2.3 × 2.3 × 13mm) | 油芯 | 1 |
| 45 | 160006 | | Screw(M3-0.5 × 4) | 止ネジ | 1 |
| 46 | 3500121 | | Main Feed Bar Connection | 後送りリンク | 1 |
| 47 | 3500120 | | Connection Bushing | 後送りリンクブッシュ | 1 |
| 48 | 300000 | | Washer | ワッシャ | 1 |
| 49 | 110118 | | Screw(M5-0.8 × 22) | 止ネジ | 1 |
| 50 | 3500136 | | Adjusting Screw Stopper | 送り調節ネジストッパ | 1 |
| | | | | | |
| 51 | 160001 | [160000] | Screw(M4-0.7 × 4)[M3-0.5 × 3] | 止ネジ | 2 |
| 52 | 3500133 | | Main Feed Bar Adjusting Screw | 送り調節ネジ | 1 |
| 53 | 100067 | | Lock Nut | ロックナット | 1 |
| 54 | 0020551 | | O-ring(P5) | Oリング | 1 |
| 55 | 3500132 | | Main Feed Bar Bracket | 送りブラケット | 1 |
| 56 | 3500138 | | Main Feed Lever Shaft(Right) | 後送りレバー軸(右) | 1 |
| 57 | 3500126 | | Connecting Shaft | 連結軸 | 1 |
| 58 | 3240072 | | Spring | バネ | 1 |
| 59 | 340003 | | Knock Pin(φ 5 × 20mm) | ノックピン | 2 |
| 60 | 0068079 | [3100104] | O-ring(P16) | Oリング | 1 |
| | | | | | |
| 61 | 3500137 | | Main Feed Lever Shaft(Left) | 後送りレバー軸(左) | 1 |
| 62 | 3500139 | | Main Feed Lever | 送りレバー | 1 |
| 63 | 110013 | | Screw(M4-0.7 × 8) | 止ネジ | 1 |
| 64 | 3500141 | | Main Feed Graduations | 送り目盛板 | 1 |
| 65 | 009749 | | Screw(M4-0.7 × 16) | 止ネジ | 2 |
| 66 | 0020350 | | Main Feed Lever Stopper | 送りレバーストッパ | 1 |
| 67 | 000669 | | Washer | ワッシャ | 1 |
| 68 | 000600 | | Spring Washer | スプリングワッシャ | 1 |
| 69 | 005049 | | Screw(M5-0.8 × 8) | 止ネジ | 1 |
| 70 | 310102 | [310096] | Oil Wick(φ 4.8 × 150)[φ 5 × 130] | 油芯 | 1 |
| | | | | | |
| 71 | 3500190 ◆ | | Feed Lift Connecting Rod, C. Set | 送り上下ロッド(組) | 1 |

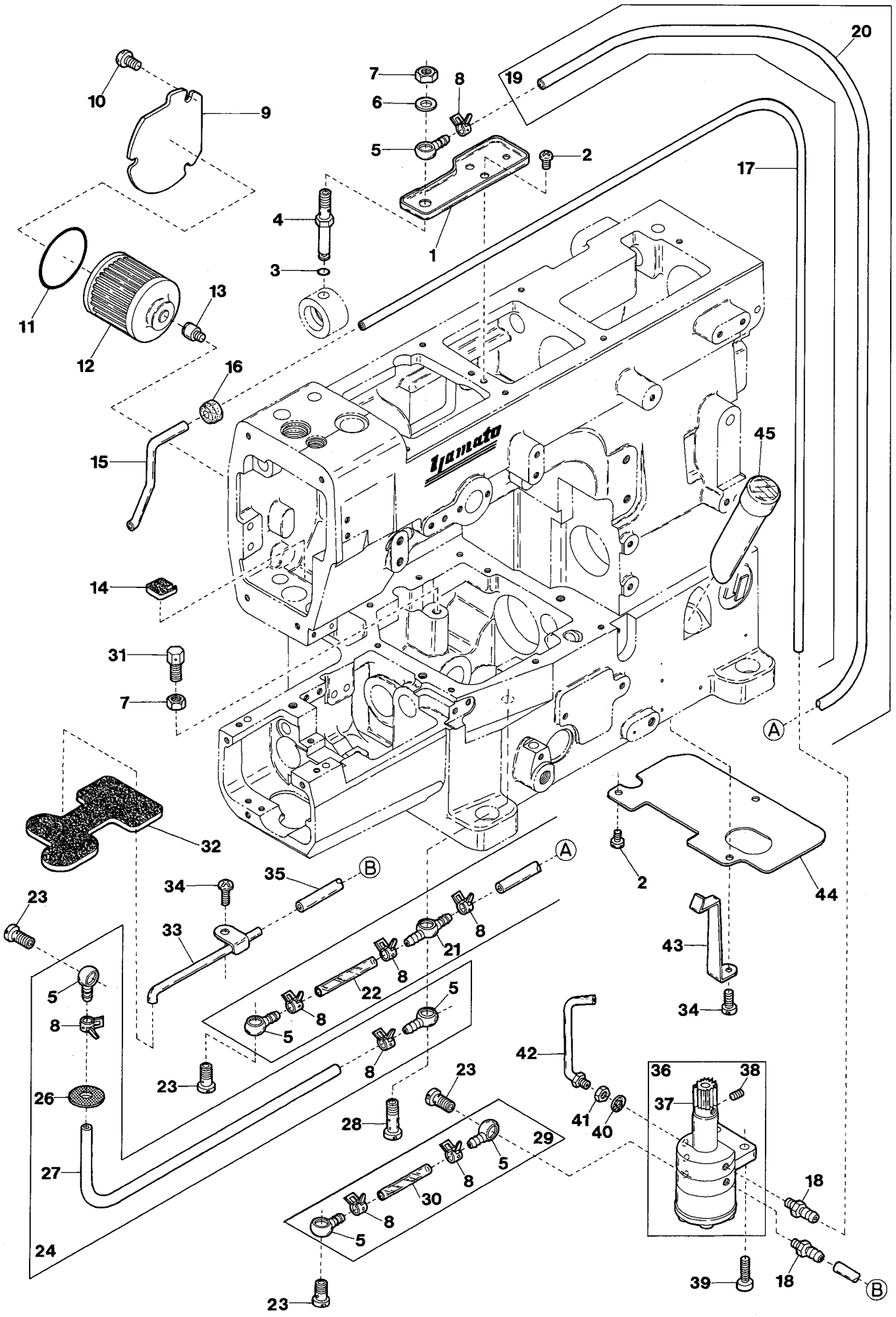
20
19
7
8
6
10
9
5
2
17
4
1
3
13
11
12
16
15
45
14
31
7
A
32
A
B
35
34
2
44
23
33
8
21
43
5
8
22
8
5
5
34
8
8
42
23
36
38
23
37
26
28
41
40
29
5
27
8
30
18
8
5
24
39
18
B
23

VG2700

| Ref.No | Parts No. | | Description | 品　名 | Amt. Req |
|---|---|---|---|---|---|
| 1 | 3500412 | | Oil Receiver | 油受ケ皿 | 1 |
| 2 | 110012 | | Screw(M4-0.7 × 5) | 止ネジ | 4 |
| 3 | 0032518 | | O-ring(P3) | Oリング | 1 |
| 4 | 3500402 | | Oil Sight Top Nozzle | ノズル | 1 |
| 5 | 3100370 | | Oil Tube Joint, One Way | 片口管継手 | 6 |
| 6 | 000425 | | Washer | ワッシャ | 1 |
| 7 | 000234 | | Nut | ナット | 2 |
| 8 | 0031831 | | Oil Tube Clamp | 緊束環 | 8 |
| 9 | 3500229 | | Oil Filter Cover | オイルフィルタカバー | 1 |
| 10 | 110045 | | Screw(M4-0.7 × 12) | 止ネジ | 3 |
| | | | | | |
| 11 | 3100061 | | O-ring(P42) | Oリング | 1 |
| 12 | 3100345 | | Oil Filter | オイルフィルタ | 1 |
| 13 | 3100329 | | Oil Filter Connector | オイルフィルタ継手 | 1 |
| 14 | 3200237 | | Felt | フェルト | 1 |
| 15 | 3200236 | | Suction Pipe | 吸入パイプ | 1 |
| 16 | 0093617 | | Suction Pipe Bushing | 吸入パイプブッシュ | 1 |
| 17 | 3200238 | | Oil Tube(3 × 5 × 440mm) | オイルパイプ | 1 |
| 18 | 0010017 | | Bamboo Joint | バンブ継手 | 2 |
| 19 | 3500422 | | Oil Tube(Long), Complete Set | 給油パイプ(長)(組) | 1 |
| 20 | 3400261 | | Oil Tube(4 × 6 × 500mm) | オイルパイプ | 1 |
| | | | | | |
| 21 | 3100371 | | Oil Tube Joint, Two Way | 両口管継手 | 1 |
| 22 | 3100332 | | Oil Tube(4 × 6 × 37mm) | オイルパイプ | 1 |
| 23 | 320008 | | Fitting Stud(Short) | 管継手ボルト(短) | 4 |
| 24 | 3500423 | | Oil Tube(Middle), Complete Set | 給油パイプ(中)(組) | 1 |
| 25 | | | | | |
| 26 | 3500415 | | Oil Filter Screen | 濾過網 | 1 |
| 27 | 3500424 | | Oil Tube(4 × 6 × 190mm) | オイルパイプ | 1 |
| 28 | 320009 | | Fitting Stud(Long) | 管継手ボルト(長) | 1 |
| 29 | 3100356 | | Oil Tube(Short), Complete Set | 給油パイプ(短)(組) | 1 |
| 30 | 3100331 | | Oil Tube(4 × 6 × 31mm) | オイルパイプ | 1 |
| | | | | | |
| 31 | 3500418 | | Oiling Shower | 給油シャワ | 1 |
| 32 | 3500410 | | Draining Felt | 排油フェルト | 1 |
| 33 | 3500404 | | Draining Pipe | 排油パイプ | 1 |
| 34 | 110013 | | Screw(M4-0.7 × 8) | 止ネジ | 2 |
| 35 | 3500425 | | Oil Tube(4 × 6 × 350mm) | オイルパイプ | 1 |
| 36 | 3150195 | [3150143] | Oil Pump, Complete Set | ポンプ(組) | 1 |
| 37 | 2040033 | [0030711] | Oil Pump Driving Worm Gear | ウォームギア | 1 |
| 38 | 160001 | | Screw(M4-0.7 × 4) | 止ネジ | 2 |
| 39 | 120011 | [120013] | Screw(M6-1 × 18)[M6-1 × 15] | 止ネジ | 2 |
| 40 | 000560 | [000567] | Seal | パッキン | 1 |
| | | | | | |
| 41 | 100014 | [100004] | Nut | ナット | 1 |
| 42 | 3150151 | | Oil Nozzle for Worm Gear | 給油パイプ | 1 |
| 43 | 3100330 | | Oil Tube Stay | オイルパイプ支エ | 1 |
| 44 | 3500236 | | Dust Proof Plate | 防塵板 | 1 |
| 45 | 3500006 | | Oil Sight Gauge | オイルゲージ | 1 |

# PULLER MECHANISM(1)

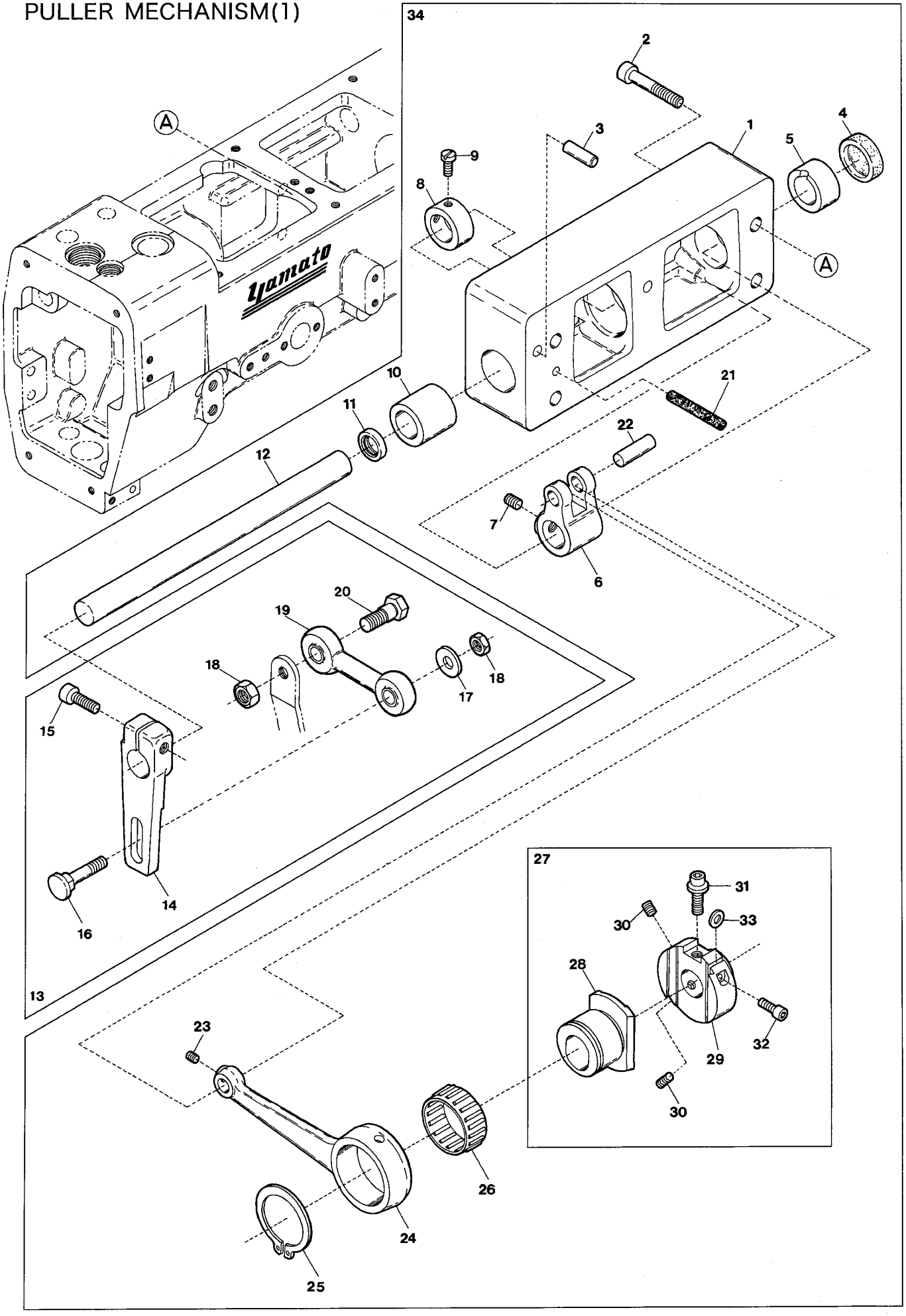

| Ref.No | Parts No. | Description | 品　名 | Amt. Req |
|---|---|---|---|---|
| 1 | 3100625 | Upper Feed Roller Shaft Bracket | 上ローラ軸ブラケット | 1 |
| 2 | 120019 | Screw(M6-1 × 18) | 止ネジ | 4 |
| 3 | 000779 | Knock Pin | ノックピン | 2 |
| 4 | 3100006 | Seal Plug | 詰栓 | 1 |
| 5 | 3100607 | Roller Shaft Bushing(Right) | 上ローラ軸ブッシュ(右) | 1 |
| 6 | 3100604 | Upper Feed Roller Shaft Lever | 上ローラ軸腕 | 1 |
| 7 | 160007 | Screw(M6-1 × 6) | 止ネジ | 2 |
| 8 | 0065398 | Collar(14 × 22 × 10mm) | カラー | 1 |
| 9 | 009604 | Screw(11/64-40 × 5.5) | 止ネジ | 2 |
| 10 | 3100626 | Roller Shaft Bushing(Left) | 上ローラ軸ブッシュ(左) | 1 |
| 11 | 0065395 | Oil Seal | オイルシール | 1 |
| 12 | 3100605 | Upper Feed Roller Shaft | 上ローラ軸 | 1 |
| 13 | ———— | See page 16 | 16ページ参照 | - |
| 14 | 3100608 | Upper Feed Roller Lever | 上ローラレバー | 1 |
| 15 | 120012 | Screw(M6-1 × 20) | 止ネジ | 1 |
| 16 | 0065401 | Upper Feed Roller Lever Pin | 上ローラレバーピン | 1 |
| 17 | 000613 | Washer | ワッシャ | 1 |
| 18 | 000306 | Nut | ナット | 2 |
| 19 | 3501281 | Upper Feed Roller Lever Rod | 上ローラレバーロッド | 1 |
| 20 | 240010 | Screw(1/4-40 × 11) | 止ネジ | 1 |
| 21 | 310063 | Oil Wick | 油芯 | 1 |
| 22 | 0032921 | Upper Feed Roller Driving Rod Pin | 上ローラロッドピン | 1 |
| 23 | 160001 | Screw(M4-0.7 × 4) | 止ネジ | 1 |
| 24 | 3100602 | Upper Feed Roller Driving Rod | 上ローラロッド | 1 |
| 25 | 3100192 | Retaining Ring | ストップリング | 1 |
| 26 | 3100623 | Roller Bearing | ニードルベアリング | 1 |
| 27 | 3100603 | Upper Feed Roller Regulator, C. Set | 上ローラ調節器(組) | 1 |
| 28 | 3100601 | Upper Feed Roller Eccentric | 上ローラエキセン | 1 |
| 29 | 3100600 | Upper Feed Roller Regulator | 上ローラ調節器 | 1 |
| 30 | 160003 | Screw(M5-0.8 × 5) | 止ネジ | 2 |
| 31 | 190007 | Adjusting Screw(M5-0.8 × 6) | 調節ネジ | 1 |
| 32 | 120008 | Screw(M4-0.7 × 8) | 止ネジ | 1 |
| 33 | 300045 | Spacer | スペーサ | 1 |
| 34 | 3100636 | Upper Feed Roller Shaft Bracket, C. Set | 上ローラ軸ブラケット(組) | 1 |

Note: Parts No. of Puller Mechanism, C. Set・・・3500695 = 3100636 + 3500697 + 3500699
(注) プラー機構(組)の Parts No.・・・3500695 = 3100636 + 3500697 + 3500699

# 15
## PULLER MECHANISM(2)

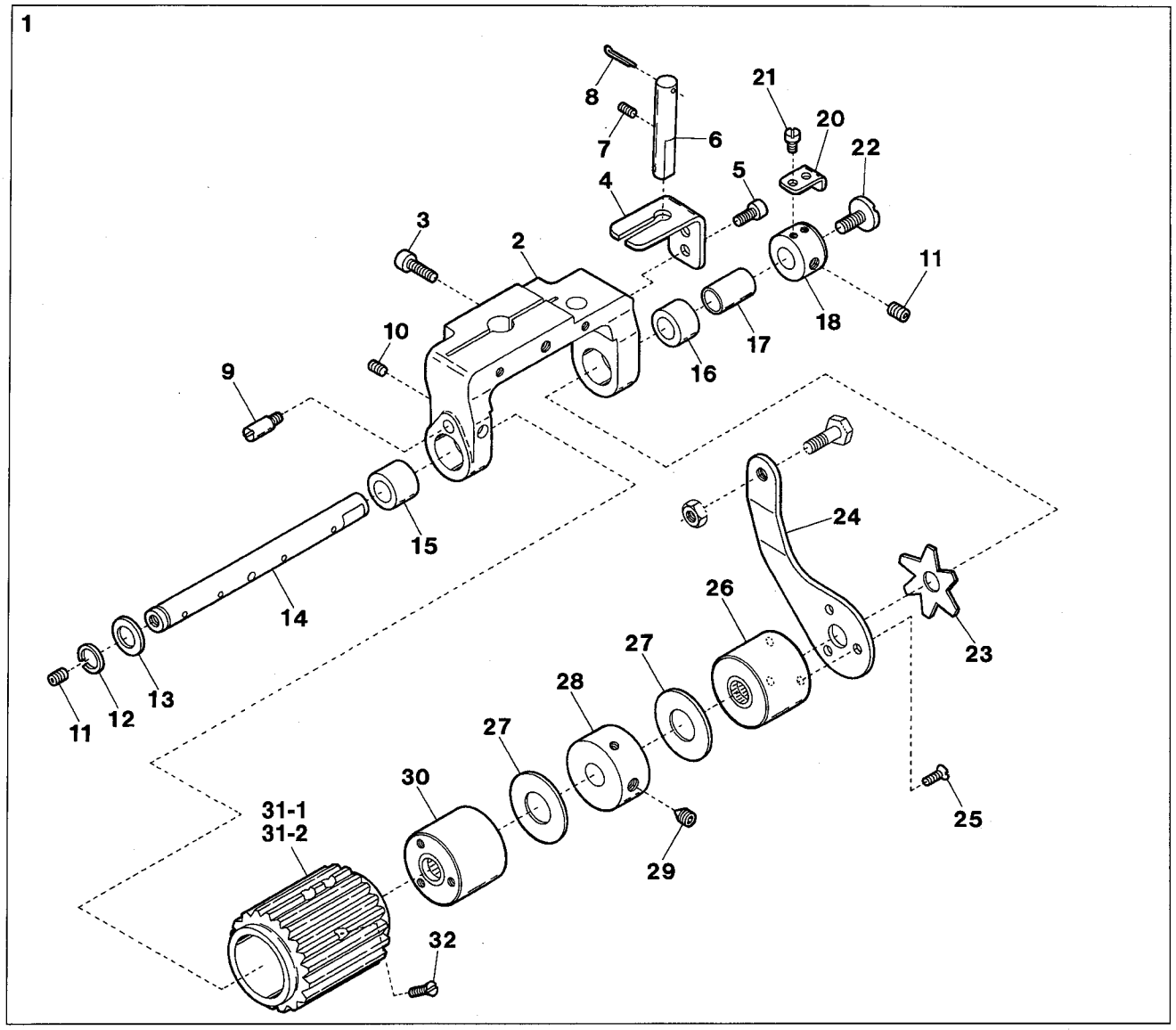


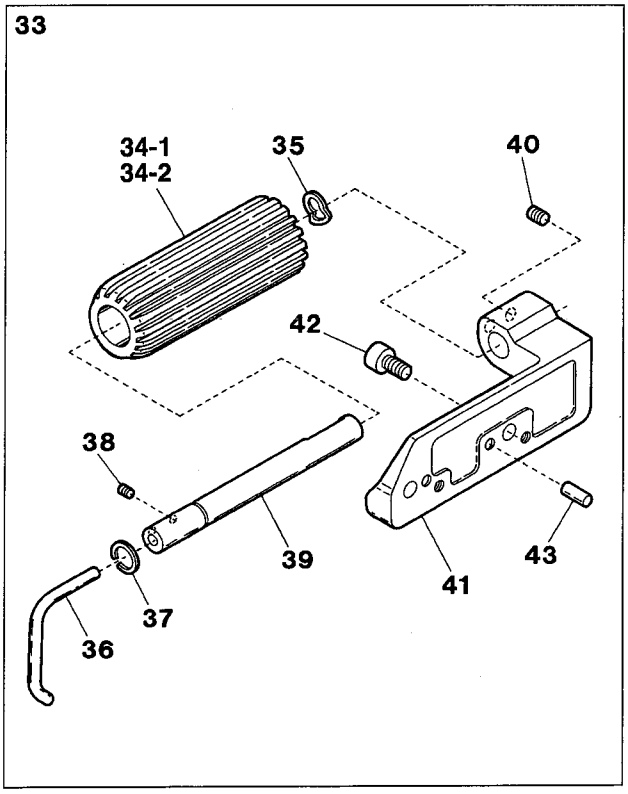


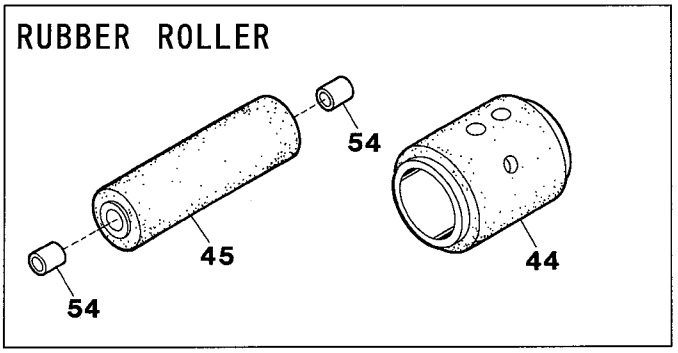


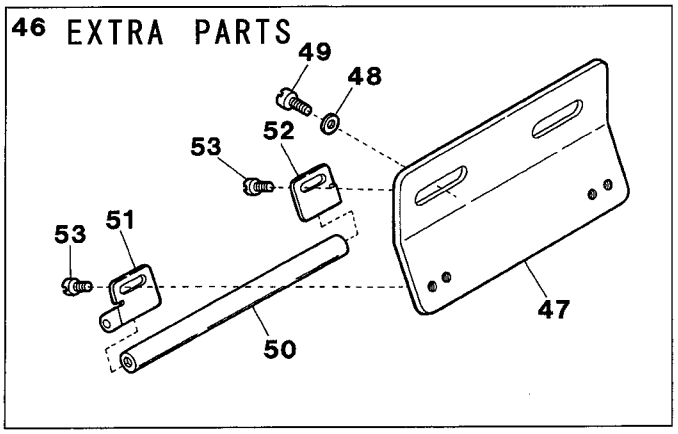

| Ref.No | Parts No. | Description | 品　名 | Amt. Req |
|---|---|---|---|---|
| 1 | ———— | See Page 16 | 16ページ参照 | - |
| 2 | 3100611 | Upper Feed Roller Yoke | 上ローラヨーク | 1 |
| 3 | 120012 | Screw(M6-1 × 20) | 止ネジ | 1 |
| 4 | 3100612 | Upper Feed Roller Yoke Guide | 上ローラヨークガイド | 1 |
| 5 | 120008 | Screw(M4-0.7 × 8) | 止ネジ | 2 |
| 6 | 3100613 | Upper Feed Roller Yoke Pin | 上ローラヨークピン | 1 |
| 7 | 160007 | Screw(M6-1 × 6) | 止ネジ | 1 |
| 8 | 0090620 [3200133] | Wire(0.9 × 45mm) | 鉄線 | 1 |
| 9 | 180005 | Screw(M4-0.7 × 6) | 止ネジ | 1 |
| 10 | 160001 | Screw(M4-0.7 × 4) | 止ネジ | 2 |
| | | | | |
| 11 | 160003 | Screw(M5-0.8 × 5) | 止ネジ | 3 |
| 12 | 0060056 | Retaining Ring | ストップリング | 1 |
| 13 | 2100902 | Thrust Ring | スラストリング | 1 |
| 14 | 3501270 | Clutch Driving Shaft | クラッチ軸 | 1 |
| 15 | 3100616 | Clutch Driving Shaft Bushing(Left) | クラッチ軸ブッシュ(左) | 1 |
| 16 | 0065414 | Clutch Driving Shaft Bushing(Right) | クラッチ軸ブッシュ(右) | 1 |
| 17 | 0065421 | Clutch Tension Sleeve | クラッチテンションスリーブ | 1 |
| 18 | 3501283 | Adjusting Collar | 調節カラー | 1 |
| 19 | | | | |
| 20 | 3501284 | Adjusting Screw Stay | 調節ネジ支エ | 1 |
| | | | | |
| 21 | 110002 | Screw(M3-0.5 × 5) | 止ネジ | 2 |
| 22 | 110097 | Screw(M5-0.8 × 12) | 止ネジ | 1 |
| 23 | 3501282 | Clutch Tension Spring | クラッチテンションバネ | 1 |
| 24 | 3501280 | Clutch Driving Lever | クラッチ板(右) | 1 |
| 25 | 130003 | Screw(M4-0.7 × 7.3) | 止ネジ | 3 |
| 26 | 3501276 | Clutch Sleeve(Right) | クラッチスリーブ(右) | 1 |
| 27 | 3501272 | Thrust Plate | スラストプレート | 2 |
| 28 | 3501271 | Clutch Spacer | クラッチスペーサ | 1 |
| 29 | 160005 | Screw(M6-1 × 8) | 止ネジ | 1 |
| 30 | 3501275 | Clutch Sleeve(Left) | クラッチスリーブ(左) | 1 |
| | | | | |
| 31-1 | 3501290 | Upper Feed Roller (30 teeth)(Standard) | 上ローラ(30山)(標準) | 1 |
| 31-2 | 3501289 ◆ | Upper Feed Roller(26 teeth)(Extra Parts) | 上ローラ(26山)(特注部品) | 1 |
| 32 | 007621 | Screw(9/64-40 × 8.5) | 止ネジ | 3 |
| 33 | 3500697 | Lower Feed Roller Support, C. Set | 下ローラサポート(組) | 1 |
| 34-1 | 3501260 | Lower Feed Roller(19 teeth)(Standard) | 下ローラ(19山)(標準) | 1 |
| 34-2 | 3501259 ◆ | Lower Feed Roller(16theeth)(Extra Parts) | 下ローラ(16山)(特注部品) | 1 |
| 35 | 000487 | Wave Washer | 波形ワッシャ | 1 |
| 36 | 3501252 | Lower Feed Roller Guide | 下ローラガイド | 1 |
| 37 | 0060056 | Retaining Ring | ストップリング | 1 |
| 38 | 160000 | Screw(M3-0.5 × 3) | 止ネジ | 2 |
| 39 | 3501251 | Lower Feed Roller Shaft | 下ローラ軸 | 1 |
| 40 | 160003 | Screw(M5-0.8 × 5) | 止ネジ | 1 |

Ref. No. 41 to 54 See the following page.

# 15
## PULLER MECHANISM(2)

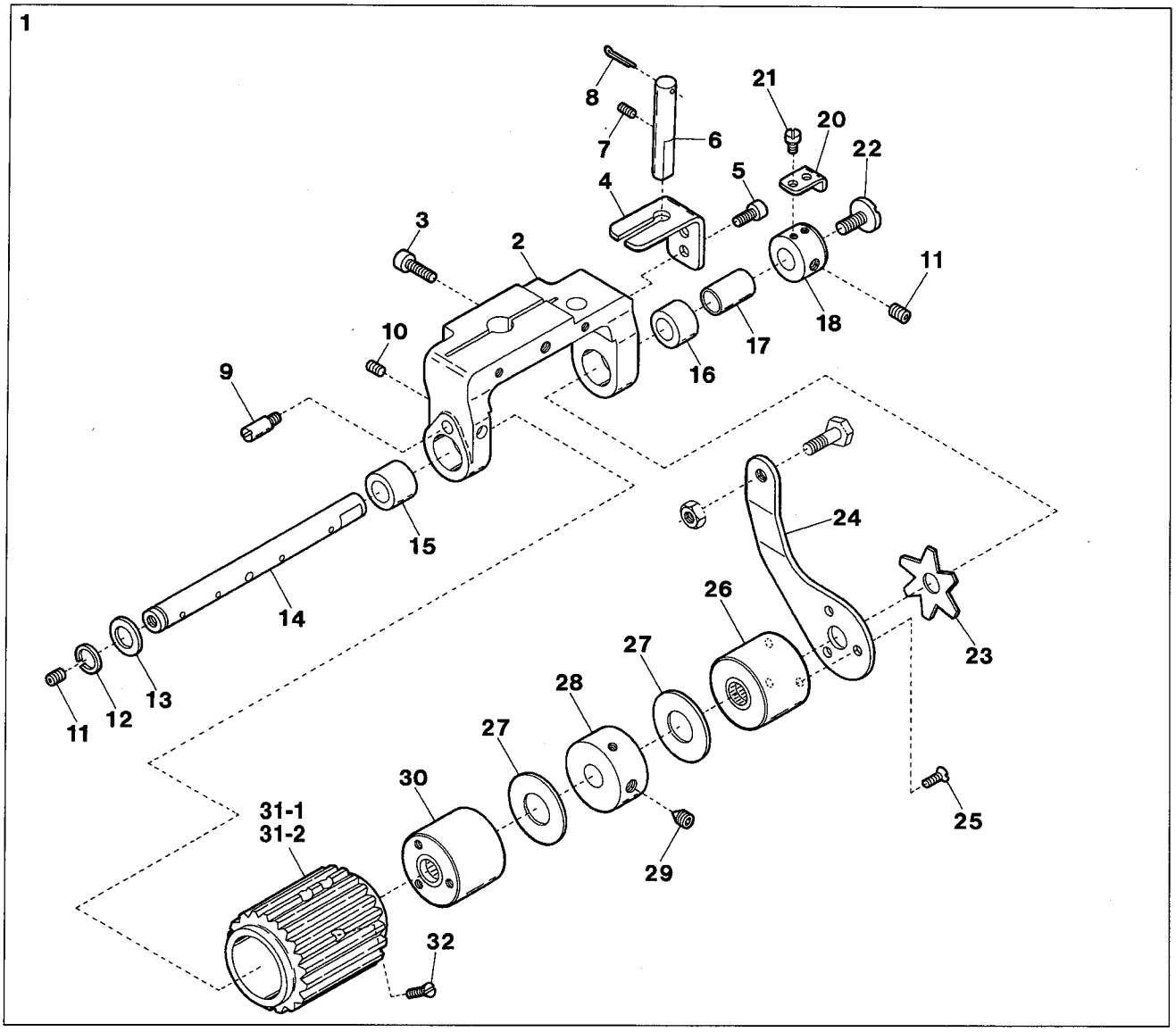


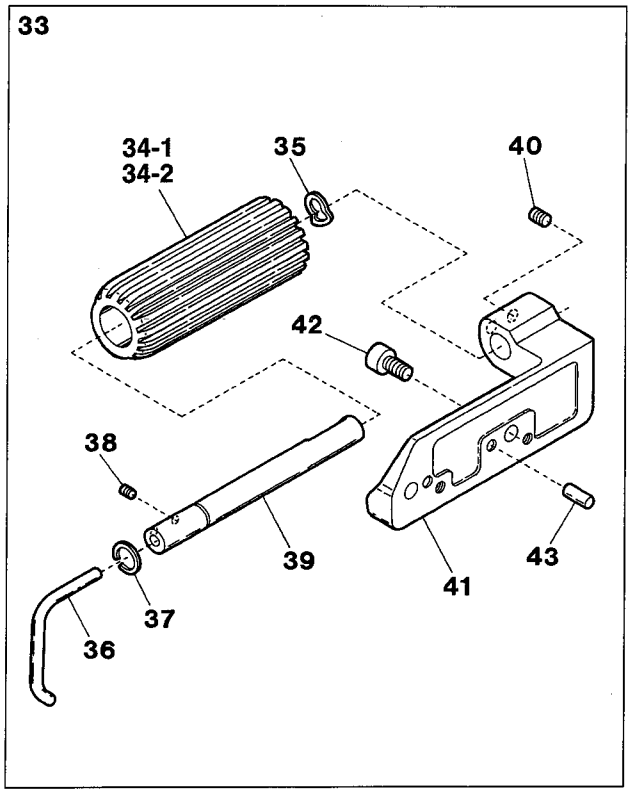


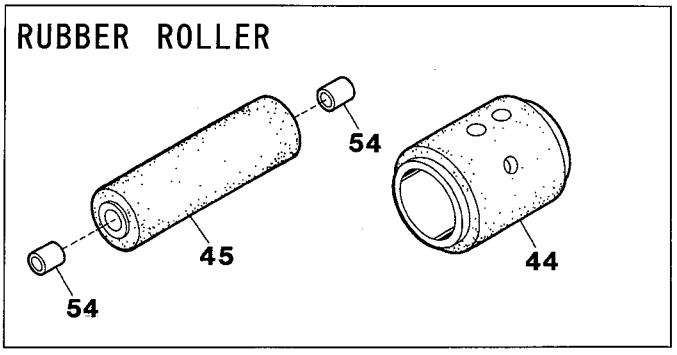


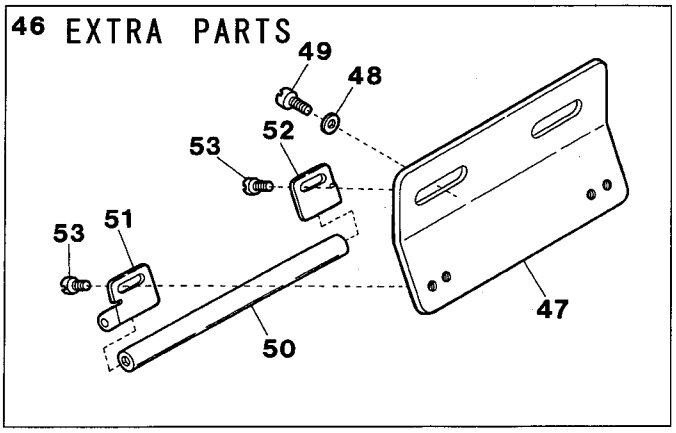

| Ref.No | Parts No. | Description | 品　名 | Amt. Req |
|---|---|---|---|---|
| 41 | 3501250 | Lower Feed Roller Bracket | 下ローラブラケット | 1 |
| 42 | 120041 | Screw(M6-1 × 12) | 止ネジ | 2 |
| 43 | 000779 | Knock Pin | ノックピン | 2 |
| 44 | 3501295 | Upper Feed Roller(Rubber) | 上ローラ(ゴム) | 1 |
| 45 | 3501265 | Lower Feed Roller(Rubber) | 下ローラ(ゴム) | 1 |
| 46 | 3500698 | Supplementary Roller, C. Set | 補助ローラ(組) | 1 |
| 47 | 3501253 | Supplementary Roller Support | 補助ローラ取付板 | 1 |
| 48 | 000538 | Washer | ワッシャ | 2 |
| 49 | 110009 | Screw(M4-0.7 × 8) | 止ネジ | 2 |
| 50 | 3501122 | Supplementary Roller | 補助ローラ | 1 |
| | | | | |
| 51 | 0065436 | Supplementary Roller Stay(A) | 補助ローラ支エ(A) | 1 |
| 52 | 0065437 | Supplementary Roller Stay(B) | 補助ローラ支エ(B) | 1 |
| 53 | 009730 [110030] | Screw(1/8-44 × 5.3)[M3-0.5 × 2.6] | 止ネジ | 4 |
| 54 | 0063460 ◆ | Lower Feed Roller(Rubber) Bushing | 下ローラ(ゴム)ブッシュ | 2 |

# 16

## PULLER MECHANISM(3)

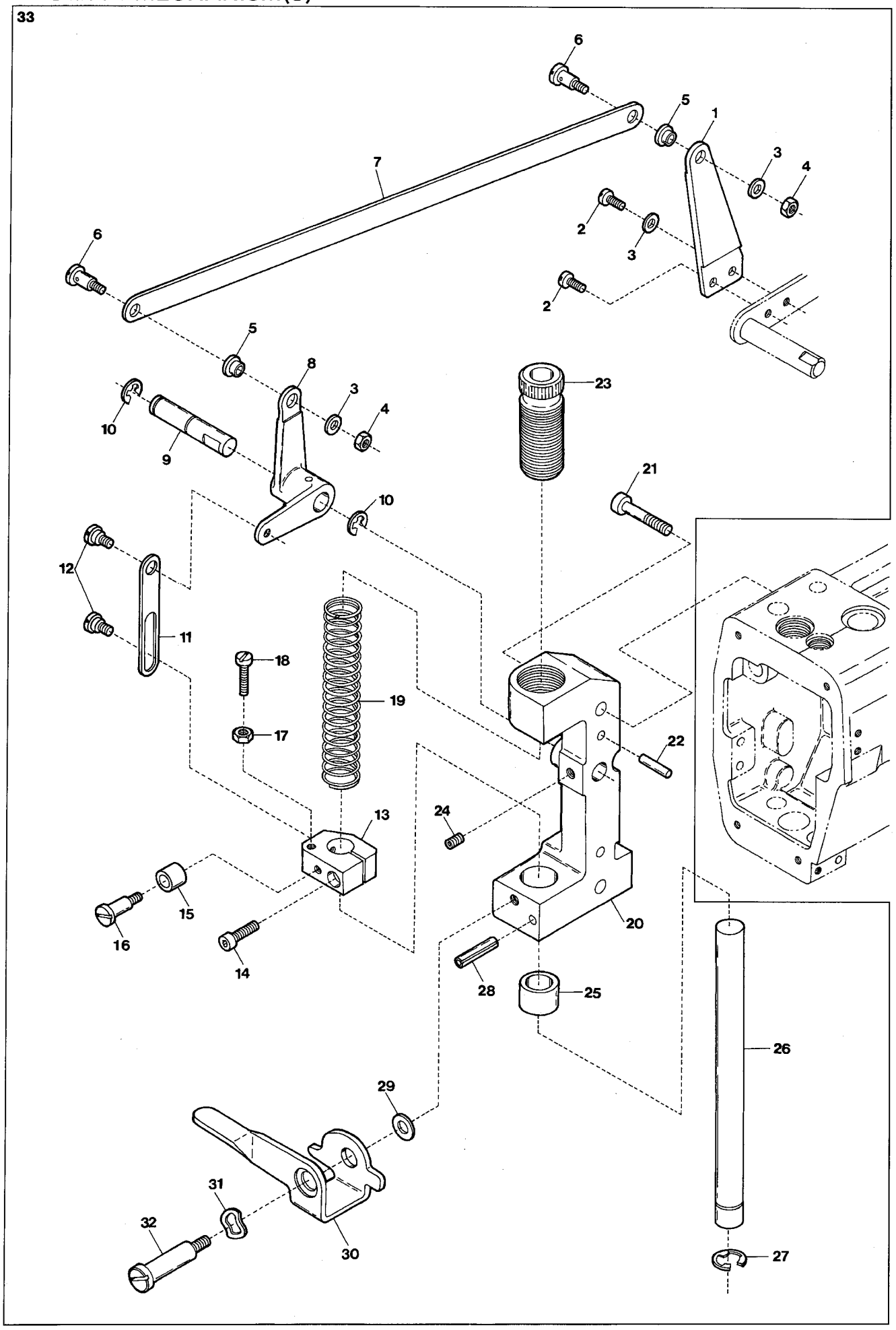

| Ref.No | Parts No. | Description | 品　名 | Amt. Req |
|---|---|---|---|---|
| 1 | 0065381 | Upper Feed Roller Lifter(Right) | 上ローラ揚ゲ(右) | 1 |
| 2 | 110009 | Screw(M4-0.7 × 8) | 止ネジ | 2 |
| 3 | 000538 | Washer | ワッシャ | 3 |
| 4 | 000334 | Nut | ナット | 2 |
| 5 | 0034979 | Flexible Wire Clamp Bushing | ワイヤ止メブッシュ | 2 |
| 6 | 006075 | Screw(11/64-40 × 6) | 止ネジ | 2 |
| 7 | 0067126 | Lifter Connecting Plate | 上ローラ揚ゲ連結板 | 1 |
| 8 | 0065374 | Upper Feed Roller Lifter(Left) | 上ローラ揚ゲ(左) | 1 |
| 9 | 0065375 | Upper Feed Roller Lifter Pin | 上ローラ揚ゲピン | 1 |
| 10 | 0095027 | Retaining Ring | ストップリング | 2 |
| | | | | |
| 11 | 0065376 | Lifter Connecting Plate | 上ローラ吊リ | 1 |
| 12 | 006038 | Screw(3/16-32 × 2.2) | 止ネジ | 2 |
| 13 | 0065407 | Roller Press Bar Bracket | 上ローラ押エ棒抱キ | 1 |
| 14 | 005650 | Screw(M5-0.8 × 14) | 止ネジ | 1 |
| 15 | 0065402 | Lifting Lever Sleeve | 上ローラレバースリーブ | 1 |
| 16 | 006411 | Screw(11/64-40 × 5.5) | 止ネジ | 1 |
| 17 | 000340 | Nut | ロックナット | 1 |
| 18 | 009931 | Stop Screw(11/64-40 × 26) | ストッパネジ | 1 |
| 19 | 3100614 | Roller Press Spring | 上ローラ押エバネ | 1 |
| 20 | 3100610 | Upper Feed Roller Bracket | 上ローラブラケット | 1 |
| | | | | |
| 21 | 009753 | Screw(M6-1 × 35) | 止ネジ | 2 |
| 22 | 000779 | Knock Pin | ノックピン | 2 |
| 23 | 0065405 | Roller Press Bar Bushing(Upper) | 上ローラ押エ棒ブッシュ(上) | 1 |
| 24 | 160007 | Screw(M6-1 × 6) | 止ネジ | 1 |
| 25 | 3100609 | Roller Press Bar Bushing(Lower) | 上ローラ押エ棒ブッシュ(下) | 1 |
| 26 | 0065404 | Upper Feed Roller Press Bar | 上ローラ押エ棒 | 1 |
| 27 | 0034117 | Retaining Ring | ストップリング | 1 |
| 28 | 000690 | Stop Pin | ストップピン | 1 |
| 29 | 000613 | Washer | ワッシャ | 1 |
| 30 | 0067111 | Upper Feed Roller Lifting Lever | 手揚ゲ | 1 |
| | | | | |
| 31 | 000487 | Corrugated Washer | 波形ワッシャ | 1 |
| 32 | 170008 | Screw(M6-1 × 9) | 止ネジ | 1 |
| 33 | 3500699 | Upper Feed Roller Bracket, C. Set | 上ローラブラケット(組) | 1 |

Note: Part No. 3500699 of Ref. No. 33 contains the part numbers of Ref. No. 13 on page 14 and Ref. No. 1 on page 15.

(注) Ref. No. 33 の Part No. 3500699 は 14 ページの Ref. No. 13 及び 15 ページの Ref. No. 1 の部分を含んだPart No. です。

VG2700-□□□L, □□□S, □□□S1, □□□S2

□□□L

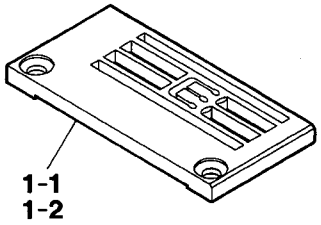


□□□S, □□□S1, □□□S2

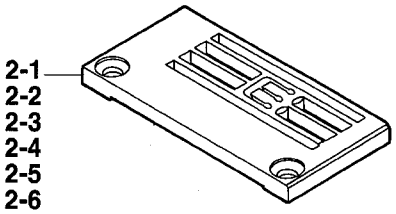


VG2700-□□□M, □□□S, □□□S1, □□□S2

2 Needle

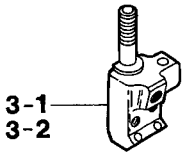


□□□M

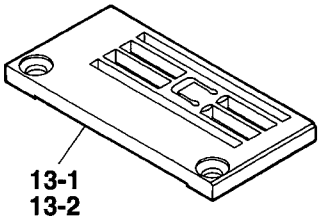


□□□S, □□□S1, □□□S2

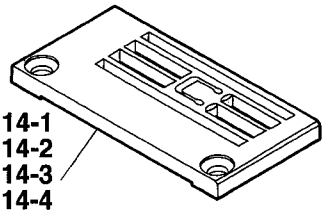


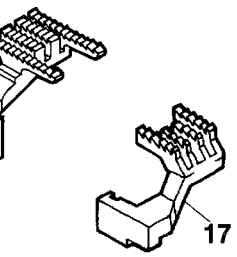


VG2700-156M-31

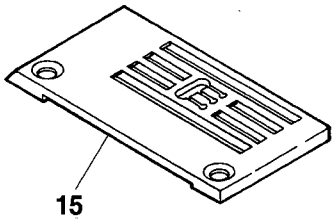


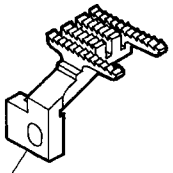





EXTRA PARTS

Fabric Edge Guide for bottom hemming

裾引き縫い用定規

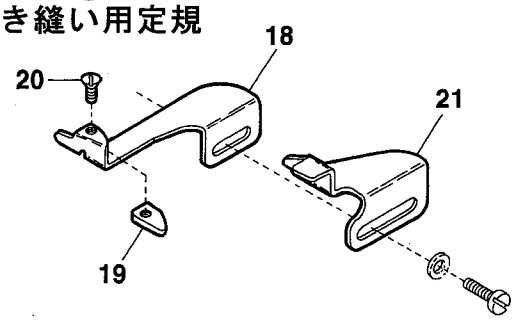

| Ref.No | Parts No. | Description | 品　名 | Amt. Req |
|---|---|---|---|---|
| 1-1 | 3508007 | Stitch Plate(48L) | 針板 | 1 |
| 1-2 | 3508008 | Stitch Plate(56L) | 針板 | 1 |
| 2-1 | 3508012 | Stitch Plate(48S) | 針板 | 1 |
| 2-2 | 3508062 | Stitch Plate(48S1) | 針板 | 1 |
| 2-3 | 3508063 | Stitch Plate(56S1) | 針板 | 1 |
| 2-4 | 3508064 | Stitch Plate(64S1) | 針板 | 1 |
| 2-5 | 3508067 | Stitch Plate(48S2) | 針板 | 1 |
| 2-6 | 3508068 | Stitch Plate(56S2) | 針板 | 1 |
| 2-7 | 3508069 | Stitch Plate(64S2) | 針板 | 1 |
| 3-1 | 0093351 | Needle Clamp(32) | 針止メ | 1 |
| 3-2 | 0093352 | Needle Clamp(40) | 針止メ | 1 |
| 4-1 | 3507000 | Presser Foot, C. Set(32) | 押エ(組) | 1 |
| 4-2 | 3507002 | Presser Foot, C. Set(40) | 押エ(組) | 1 |
| 5 | 110004 | Screw(M3.5-0.6 × 8) | 止ネジ | 1 |
| 6 | 3107303 | Presser Foot Spring(Left) | 小押エバネ(左) | 1 |
| 7 | 3107304 | Presser Foot Spring(Right) | 小押エバネ(右) | 1 |
| 8 | 130016 | Screw(M2.5-0.45 × 6) | 止ネジ | 4 |
| 9 | 3107306 | Presser Foot Hinge Pin | 押エヒンジピン | 1 |
| 10 | 110084 | Screw(M3-0.5 × 4.2) | 止ネジ | 1 |
| 11 | 000327 | Lock Nut | ロックナット | 1 |
| 12 | 260006 | Adjusting Screw(1/8-44 × 9.5) | 止ネジ | 1 |
| 13-1 | 3508000 | Stitch Plate(32M) | 針板 | 1 |
| 13-2 | 3508001 | Stitch Plate(40M) | 針板 | 1 |
| 14-1 | 3508011 | Stitch Plate(40S) | 針板 | 1 |
| 14-2 | 3508060 | Stitch Plate(32S1) | 針板 | 1 |
| 14-3 | 3508061 | Stitch Plate(40S1) | 針板 | 1 |
| 14-4 | 3508065 | Stitch Plate(32S2) | 針板 | 1 |
| 14-5 | 3508066 | Stitch Plate(40S2) | 針板 | 1 |
| 15 | 3108134 ◆ | Stitch Plate(56M-31) | 針板 | 1 |
| 16 | 3106000 ◆ | Main Feed Dog | 後送リ | 1 |
| 17 | 3109000 ◆ | Differential Feed Dog | 前送リ | 1 |
| 18 | 3100630 | Fabric Edge Guide(Left) | 定規(左) | 1 |
| 19 | 0095367 | Fabric Edge Guide Chip | 定規チップ | 1 |
| 20 | 004182 | Screw(3/32-56 × 2.5) | 止ネジ | 1 |
| 21 | 3100631 | Fabric Edge Guide(Right) | 定規(右) | 1 |

# 18

VG2700-□□□□-WF1

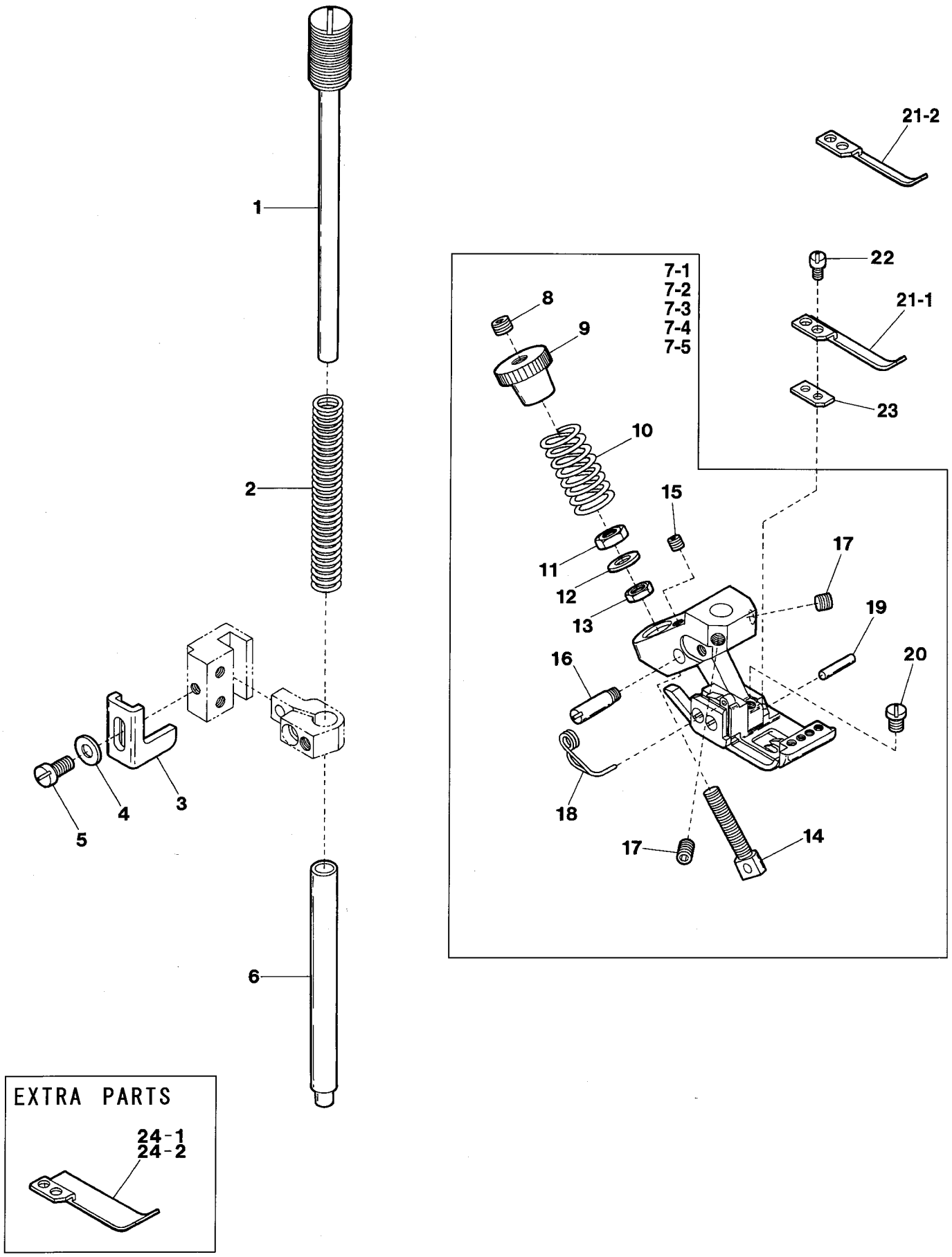

| Ref.No | Parts No. | Description | 品　名 | Amt. Req |
|---|---|---|---|---|
| 1 | 3500297 | Presser Spring Regulator | 押エ調節ネジ | 1 |
| 2 | 3200132 | Presser Bar Spring(Outer) | 押エ棒バネ(太) | 1 |
| 3 | 3101315 | Presser Bar Stopper | 押エ棒ストッパ | 1 |
| 4 | 000538 | Washer | ワッシャ | 1 |
| 5 | 004440 | Screw(11/64-40 × 8.3) | 止ネジ | 1 |
| 6 | 0093480 | Presser Bar | 押エ棒 | 1 |
| 7-1 | 3107277 | Walking Foot, C. Set(48)(Extra Parts) | ウォーキング押エ(組)(特注部品) | 1 |
| 7-2 | 3107270 | Walking Foot, C. Set(56) | ウォーキング押エ(組) | 1 |
| 7-3 | 3107282 ◆ | Walking Foot, C. Set(32)(2 Needle)(Extra Parts) | ウォーキング押エ(組)(2本針)(特注部品) | 1 |
| 7-4 | 3107275 | Walking Foot, C. Set(40)(2 Needle)(Extra Parts) | ウォーキング押エ(組)(2本針)(特注部品) | 1 |
| 7-5 | 3107280 | Walking Foot, C. Set(64)(Extra Parts) | ウォーキング押エ(組)(特注部品) | 1 |
| 8 | 160001 | Screw(M4-0.7 × 4) | 止ネジ | 1 |
| 9 | 100052 | Nut | ナット | 1 |
| 10 | 3207148 | Presser Foot Spring | 押エバネ | 1 |
| 11 | 100020 | Nut | ナット | 1 |
| 12 | 000665 | Washer | ワッシャ | 1 |
| 13 | 100057 | Nut | ナット | 1 |
| 14 | 3207146 | Adjusting Screw | 調節ネジ | 1 |
| 15 | 160025 | Screw(M3-0.5 × 6) | 止ネジ | 1 |
| 16 | 0060270 | Yoke Pin | 押エヨークピン | 1 |
| 17 | 160001 | Screw(M4-0.7 × 4) | 止ネジ | 2 |
| 18 | 3107303 | Presser Foot Spring(Left) | 小押エバネ(左) | 1 |
| 19 | 3107306 | Presser Foot Hinge Pin | 押エヒンジピン | 1 |
| 20 | 110084 | Screw(M3-0.5 × 4.2) | 止ネジ | 1 |
| 21-1 | 3107273 | Fabric Presser(width 6.2mm) | 布押エ | 1 |
| 21-2 | 3107272 | Fabric Presser(width 3.1mm) | 布押エ | 1 |
| 22 | 001228 | Screw(3/32-56 × 3.2) | 止ネジ | 2 |
| 23 | 3110201 | Spacer(Extra Parts) | スペーサ(特注部品) | 1 |
| 24-1 | 3107274 | FabricPresser(width12.6mm)(ExtraParts) | 布押エ(特注部品) | 1 |
| 24-2 | 3107285 | FabricPresser(width37.2mm)(ExtraParts) | 布押エ(特注部品) | 1 |

VG2703(1)

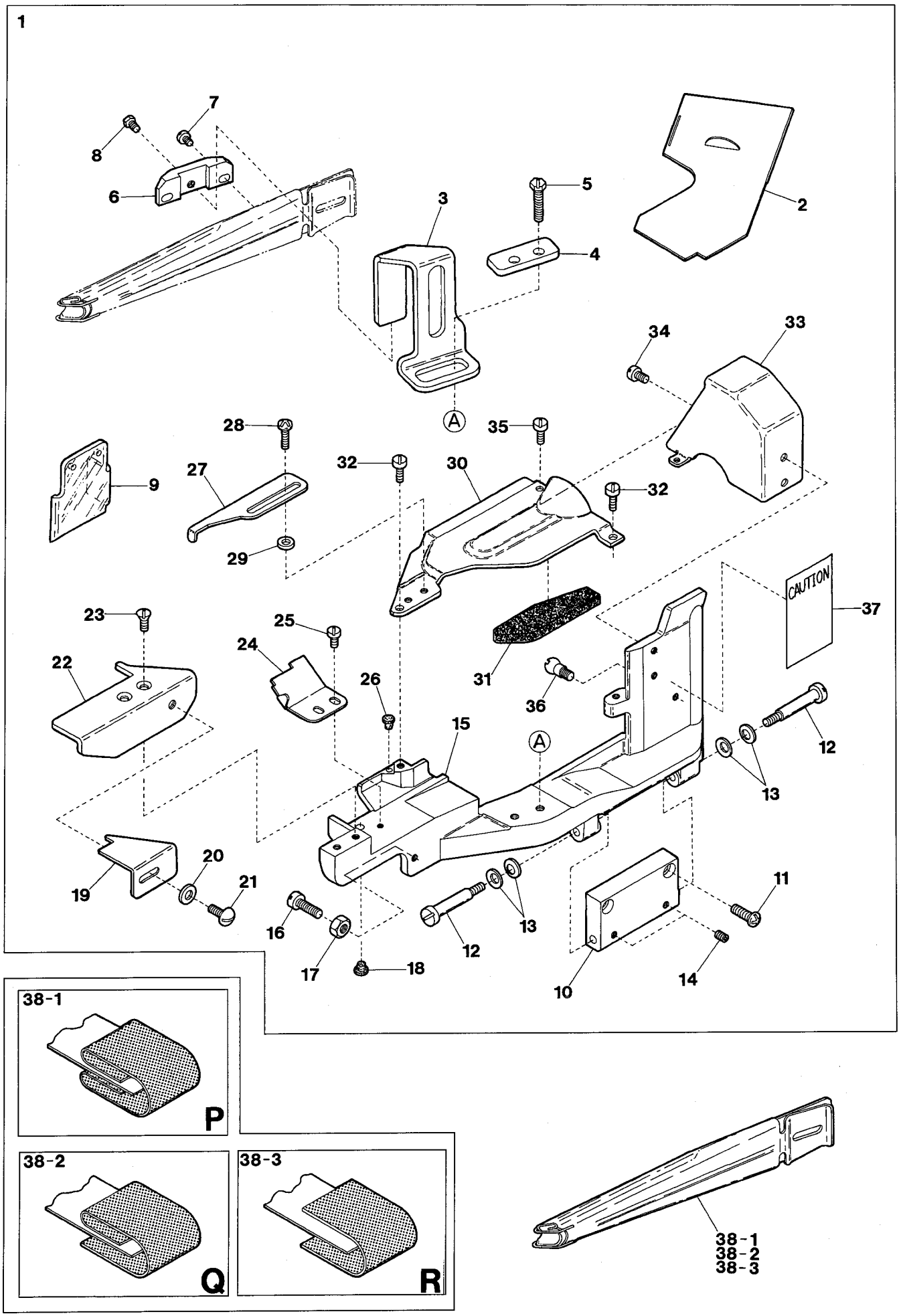
1
7
8
6
3
5
4
2
34
33
28
35
A
32
30
27
9
32
29
CAUTION
37
23
25
24
22
26
31
36
15
A
12
13
20
21
19
16
17
18
12
13
11
10
14
38-1
P
38-2
Q
38-3
R
38-1
38-2
38-3

| Ref.No | Parts No. | | Description | 品　名 | Amt. Req |
|---|---|---|---|---|---|
| 1 | 3502003 | | Front Cover, C. Set | 前開キカバー(組) | 1 |
| 2 | 3502010 | | Slide Cover | 滑り板 | 1 |
| 3 | 3502007 | | Folder Support | 定規支エ | 1 |
| 4 | 3502012 | | Folder Support Fixing Plate | 定規固定板 | 1 |
| 5 | 140019 | | Screw(M5-0.8 × 14) | 止ネジ | 2 |
| 6 | 3502006 | | Folder Clamp | 定規取付板 | 1 |
| 7 | 009932 | | Screw(11/64-40 × 4) | 止ネジ | 2 |
| 8 | 005554 | | Screw(7/32-32 × 6.5) | 止ネジ | 1 |
| 9 | 3502013 | | Eye Guard | アイガード | 1 |
| 10 | 3500223 | | Front Cover Hinge | 前開キカバーヒンジ | 1 |
| | | | | | |
| 11 | 110016 | | Screw(M4-0.7 × 14) | 止ネジ | 2 |
| 12 | 170001 | | Screw(M4-0.7 × 8) | 止ネジ | 2 |
| 13 | 300100 | | Conical Spring Washer | 皿バネワッシャ | 4 |
| 14 | 160001 | | Screw(M4-0.7 × 4) | 止ネジ | 2 |
| 15 | 3502004 | | Front Cover (Lower) | 前開キカバー(下) | 1 |
| 16 | 110045 | | Screw(M4-0.7 × 12) | 止ネジ | 1 |
| 17 | 000015 | | Nut | ナット | 1 |
| 18 | 330019 | [330011] | Seal Plug | 詰栓 | 1 |
| 19 | 3201007 | [0096277] | Fabric Slide Plate | 布滑り板 | 1 |
| 20 | 000426 | | Washer | ワッシャ | 1 |
| | | | | | |
| 21 | 110103 | | Screw(M5-0.8 × 8) | 止ネジ | 1 |
| 22 | 3502009 | | Cloth Plate(Front) | クロスプレート(前) | 1 |
| 23 | 130007 | [130002] | Screw(M4-0.7 × 10)[M3-0.5 × 6] | 止ネジ | 2 |
| 24 | 3502008 | | Supplementary Plate | 補助板 | 1 |
| 25 | 110050 | | Screw(M3-0.6 × 4.5) | 止ネジ | 2 |
| 26 | 3200033 | | Seal Plug | 詰栓 | 1 |
| 27 | 3502011 | | Tape Guide | テープガイド | 1 |
| 28 | 110048 | | Screw(M4-0.7 × 10) | 止ネジ | 2 |
| 29 | 000505 | | Spacer | スペーサ | 2 |
| 30 | 3502005 | | Front Cover(Upper) | 前開キカバー(上) | 1 |
| | | | | | |
| 31 | 3502015 | | Dustproof Cover(Sponge) | 防塵カバー(スポンジ) | 1 |
| 32 | 110094 | | Screw(M4-0.7 × 6) | 止ネジ | 2 |
| 33 | 3500233 | | Thread Take-up Cover(Front) | カムカバー(前) | 1 |
| 34 | 007627 | | Screw(M4-0.7 × 6) | 止ネジ | 2 |
| 35 | 110002 | | Screw(M3-0.5 × 5) | 止ネジ | 1 |
| 36 | 190078 | | Screw(M4-0.7 × 5) | バネ掛ケネジ | 1 |
| 37 | 390173 | | Caution Label | 注意書ラベル | 1 |
| 38-1 | 0093241 | | Folder(for Type P) | 定規(P) | 1 |
| 38-2 | 0093242 | | Folder(for Type Q) | 定規(Q) | 1 |
| 38-3 | 0093243 | | Folder(for Type R) | 定規(R) | 1 |

VG2703(2)

## VG2703-148M, 156M, 164M

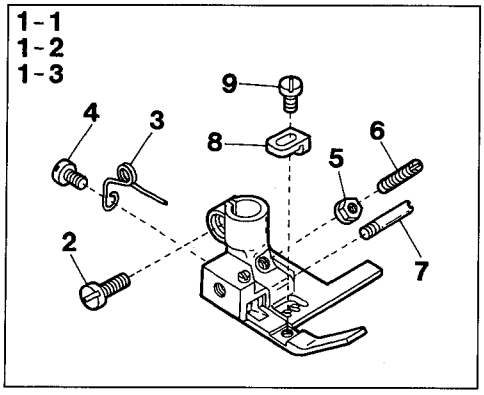


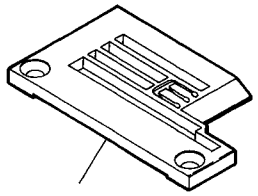

10-1
10-2
10-3

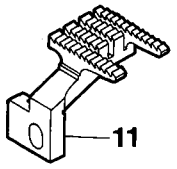

11

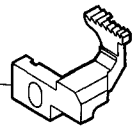

12

## VG2703-132M, 140M(2 Needle)

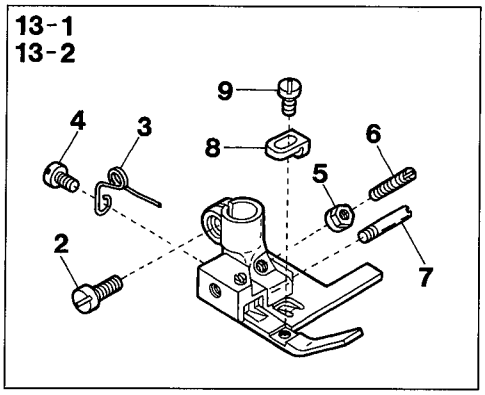


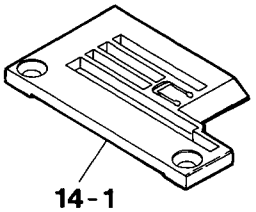

14-1
14-2

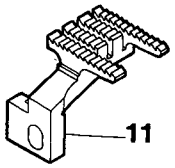

11

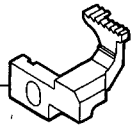

12

| Ref.No | Parts No. | Description | 品　名 | Amt. Req |
|---|---|---|---|---|
| 1-1 | 3207155 | Presser Foot, C. Set(48) | 押エ(組) | 1 |
| 1-2 | 3207156 | Presser Foot, C. Set(56) | 押エ(組) | 1 |
| 1-3 | 3207157 | Presser Foot, C. Set(64) | 押エ(組) | 1 |
| 2 | 001186 | Screw(9/64-40 × 7.8) | 止ネジ | 1 |
| 3 | 0091725 | Presser Foot Spring | 小押エバネ | 1 |
| 4 | 005133 | Screw(1/8-44 × 4.5) | 止ネジ | 1 |
| 5 | 000220 | Lock Nut | ロックナット | 1 |
| 6 | 003300 | Adjusting Screw(1/8-44 × 15) | 調節ネジ | 1 |
| 7 | 0091696 | Presser Foot Hinge Pin | 押エヒンジピン | 1 |
| 8 | 3207160 | Tape Guide | テープガイド | 1 |
| 9 | 001230 | Screw(3/32-56 × 3.8) | 止ネジ | 1 |
| 10-1 | 3508051 | Stitch Plate(48M) | 針板 | 1 |
| 10-2 | 3508052 | Stitch Plate(56M) | 針板 | 1 |
| 10-3 | 3508053 | Stitch Plate(64M) | 針板 | 1 |
| | | | | |
| 11 | 3509001 | Main Feed Dog | 後送リ | 1 |
| 12 | 3509000 | Differential Feed Dog | 前送リ | 1 |
| 13-1 | 3207150 | Presser Foot, C. Set(32) | 押エ(組) | 1 |
| 13-2 | 3207151 | Presser Foot, C. Set(40) | 押エ(組) | 1 |
| 14-1 | 3508049 | Stitch Plate(32M) | 針板 | 1 |
| 14-2 | 3508050 | Stitch Plate(40M) | 針板 | 1 |

VG2708-WF8

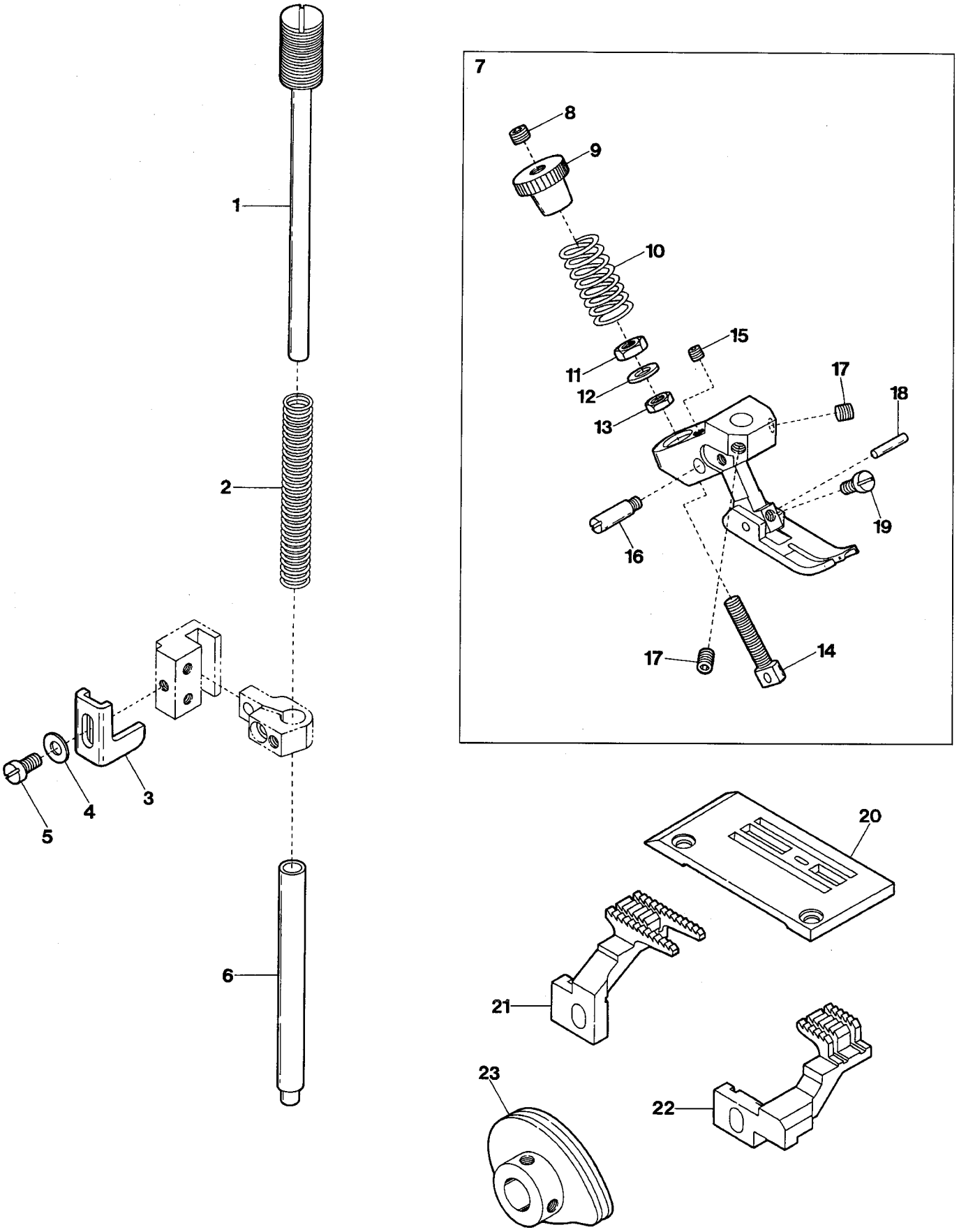

| Ref.No | Parts No. | Description | 品　名 | Amt. Req |
|---|---|---|---|---|
| 1 | 3500297 | Presser Spring Regulator | 押エ調節ネジ | 1 |
| 2 | 3200132 | Presser Bar Spring(Outer) | 押エ棒バネ(太) | 1 |
| 3 | 3101315 | Presser Bar Stopper | 押エ棒ストッパ | 1 |
| 4 | 000538 | Washer | ワッシャ | 1 |
| 5 | 004440 | Screw(11/64-40 × 8.3) | 止ネジ | 1 |
| 6 | 0093480 | Presser Bar | 押エ棒 | 1 |
| 7 | 3107290 | Walking Foot, C. Set | ウォーキング押エ(組) | 1 |
| 8 | 160001 | Screw(M4-0.7 × 4) | 止ネジ | 1 |
| 9 | 100052 | Nut | ナット | 1 |
| 10 | 3207148 | Presser Foot Spring | 押エバネ | 1 |
| | | | | |
| 11 | 100020 | Nut | ナット | 1 |
| 12 | 000665 | Washer | ワッシャ | 1 |
| 13 | 100057 | Nut | ナット | 1 |
| 14 | 3207146 | Adjusting Screw | 調節ネジ | 1 |
| 15 | 160025 | Screw(M3-0.5 × 6) | 止ネジ | 1 |
| 16 | 0060270 | Yoke Pin | 押エヨークピン | 1 |
| 17 | 160001 | Screw(M4-0.7 × 4) | 止ネジ | 2 |
| 18 | 3107306 | Presser Foot Hinge Pin | 押エヒンジピン | 1 |
| 19 | 110084 | Screw(M3-0.5 × 4.2) | 止ネジ | 1 |
| 20 | 0094507 | Stitch Plate | 針板 | 1 |
| | | | | |
| 21 | 3509031 | Main Feed Dog | 後送リ | 1 |
| 22 | 3509030 | Differential Feed Dog | 前送リ | 1 |
| 23 | 3120076 | Looper Thread Take-up | ルーパ糸調子カム | 1 |

VG2713-□□□□-T1N, T4N

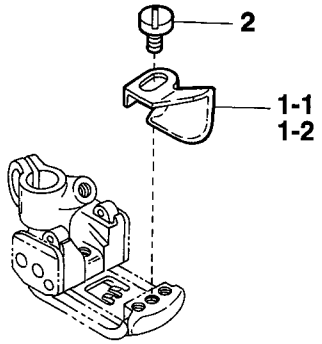


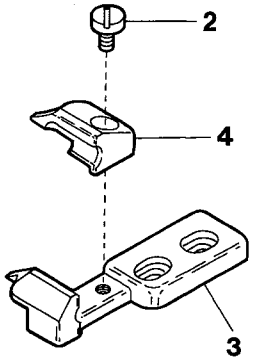


EXTRA PARTS

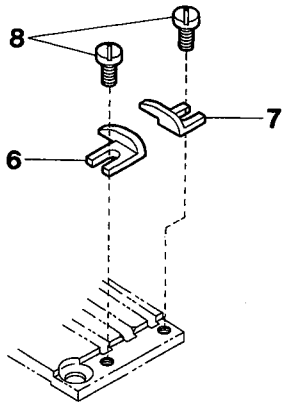


VG2713-146L-T1N, 156L-T1N, 156M-T1N

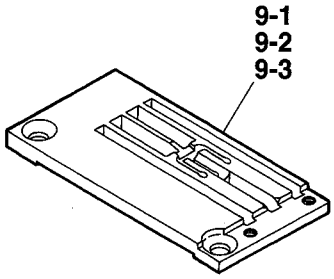


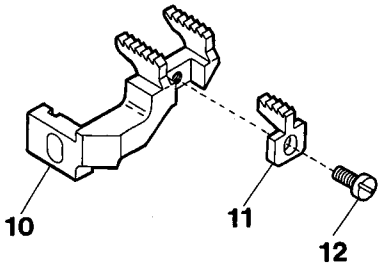


VG2713-140S-T4N, 148M-T4N, 156M-T4N, 164M-T4N

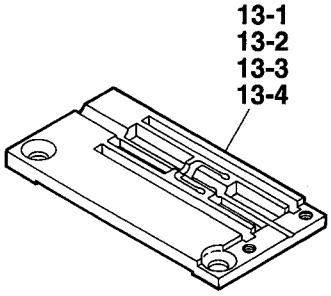


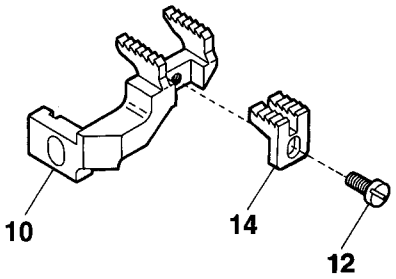

| Ref.No | Parts No. | Description | 品　名 | Amt. Req |
|---|---|---|---|---|
| 1-1 | 3107311 | Fabric Guide | 布ガイド | 1 |
| 1-2 | 3507091 ◆ | Fabric Guide(Long)(Extra Parts) | 布ガイド(長)(特注部品) | 1 |
| 2 | 110027 | Screw(M2.5-0.45 × 3.5) | 止ネジ | 2 |
| 3 | 3500631 | Fabric Guide(Left) | 布ガイド(左) | 1 |
| 4 | 3500632 | Fabric Guide(Right) | 布ガイド(右) | 1 |
| 5 | | | | |
| 6 | 3500634 | Fabric Guide(Small)(Left) | 布ガイド(小)(左) | 1 |
| 7 | 3500635 | Fabric Guide(Small)(Right) | 布ガイド(小)(右) | 1 |
| 8 | 110038 | Screw(M2.5-0.45 × 4.5) | 止ネジ | 2 |
| 9-1 | 3508020 | Stitch Plate(48L) | 針板 | 1 |
| 9-2 | 3508021 | Stitch Plate(56L) | 針板 | 1 |
| 9-3 | 3508019 | Stitch Plate(56M) | 針板 | 1 |
| 10 | 3509007 | Differential Feed Dog | 前送り | 1 |
| 11 | 3509012 | Differential Feed Dog(Middle) | 中送り | 1 |
| 12 | 110038 | Screw(M2.5-0.45 × 4.5) | 止ネジ | 1 |
| 13-1 | 3508040 | Stitch Plate(40S)(2 Needle) | 針板 | 1 |
| 13-2 | 3508031 | Stitch Plate(48M)(3 Needle) | 針板 | 1 |
| 13-3 | 3508032 | Stitch Plate(56M)(3 Needle) | 針板 | 1 |
| 13-4 | 3508033 | Stitch Plate(64M)(3 Needle) | 針板 | 1 |
| 14 | 3509010 | Differential Feed Dog(Middle) | 中送り | 1 |

VG2713-□□□□-T1A, T2A, T4A

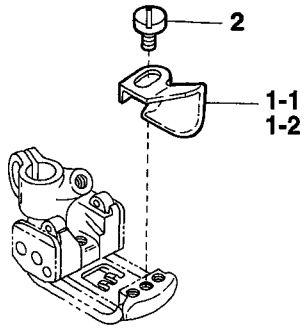


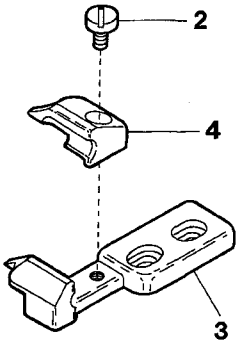


EXTRA PARTS

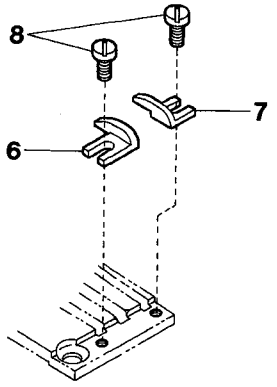


VG2713-148L-T1A, 156L-T1A, 156M-T1A

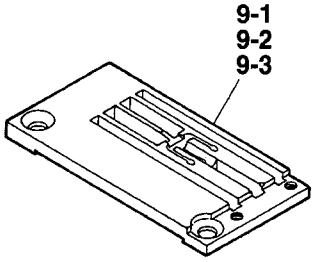


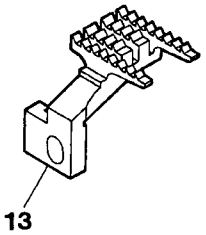


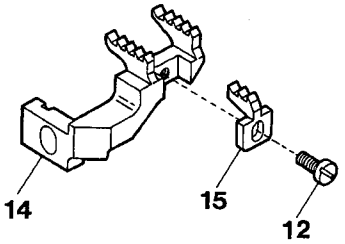


VG2713-156L-T2A

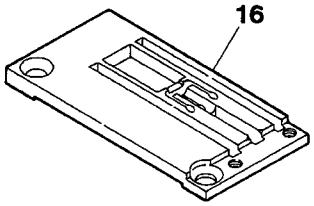


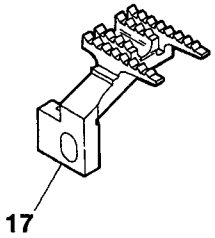


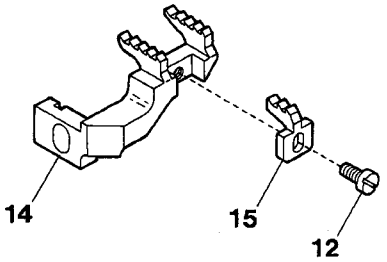


VG2713-140S-T4A, 148M-T4A, 156M-T4A, 164M-T4A

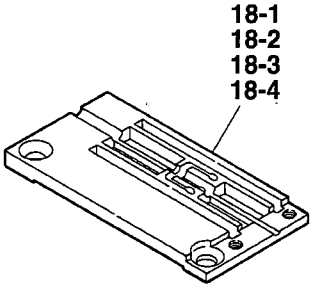


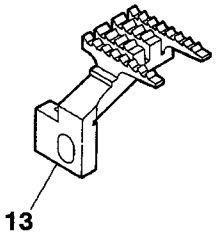


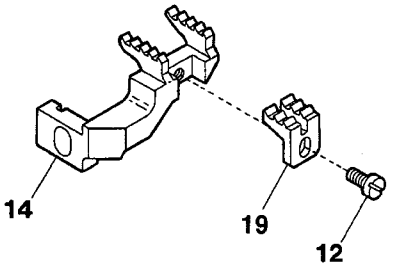

| Ref.No | Parts No. | Description | 品　名 | Amt. Req |
|---|---|---|---|---|
| 1-1 | 3107311 | Fabric Guide | 布ガイド | 1 |
| 1-2 | 3507091 ◆ | Fabric Guide(Long)(Extra Parts) | 布ガイド(長)(特注部品) | 1 |
| 2 | 110027 | Screw(M2.5-0.45 × 3.5) | 止ネジ | 2 |
| 3 | 3500631 | Fabric Guide(Left) | 布ガイド(左) | 1 |
| 4 | 3500632 | Fabric Guide(Right) | 布ガイド(右) | 1 |
| 5 | | | | |
| 6 | 3500634 | Fabric Guide(Small)(Left) | 布ガイド(小)(左) | 1 |
| 7 | 3500635 | Fabric Guide(Small)(Right) | 布ガイド(小)(右) | 1 |
| 8 | 110038 | Screw(M2.5-0.45 × 4.5) | 止ネジ | 2 |
| 9-1 | 3508019 | Stitch Plate(56M) | 針板 | 1 |
| 9-2 | 3508020 | Stitch Plate(48L) | 針板 | 1 |
| 9-3 | 3508021 | Stitch Plate(56L) | 針板 | 1 |
| 10 | | | | |
| 11 | | | | |
| 12 | 110038 | Screw(M2.5-0.45 × 4.5) | 止ネジ | 1 |
| 13 | 3509017 | Main Feed Dog | 後送リ | 1 |
| 14 | 3509015 | Differential Feed Dog | 前送リ | 1 |
| 15 | 3509016 | Differential Feed Dog(Middle) | 中送リ | 1 |
| 16 | 3508074 | Stitch Plate(56L) | 針板 | 1 |
| 17 | 3509019 | Main Feed Dog | 後送リ | 1 |
| 18-1 | 3508031 | Stitch Plate(48M) | 針板 | 1 |
| 18-2 | 3508032 | Stitch Plate(56M) | 針板 | 1 |
| 18-3 | 3508033 | Stitch Plate(64M) | 針板 | 1 |
| 18-4 | 3508040 | Stitch Plate(40S)(2 Needle) | 針板 | 1 |
| 19 | 3509018 | Differential Feed Dog(Middle) | 中送リ | 1 |

## VG2713-148M-K1N, 156M-K1N, 156M-K4N

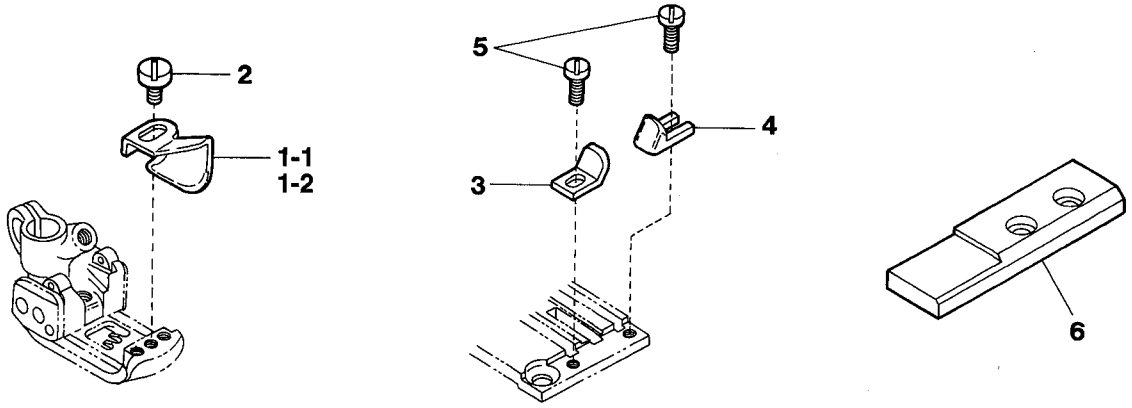


## VG2713-148L-K1N, 156M-K1N

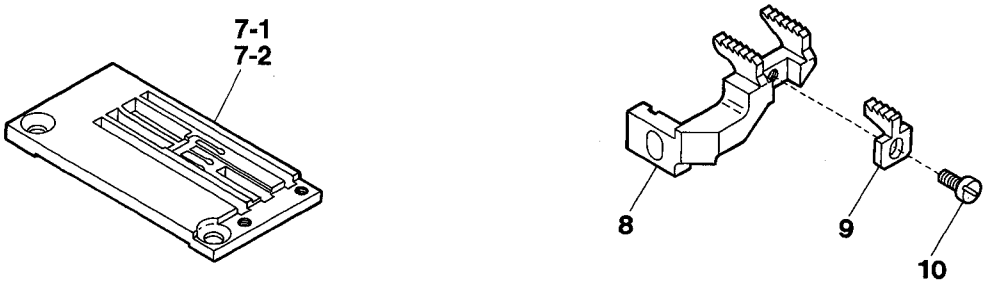


## VG2713(P)-156M-K4N

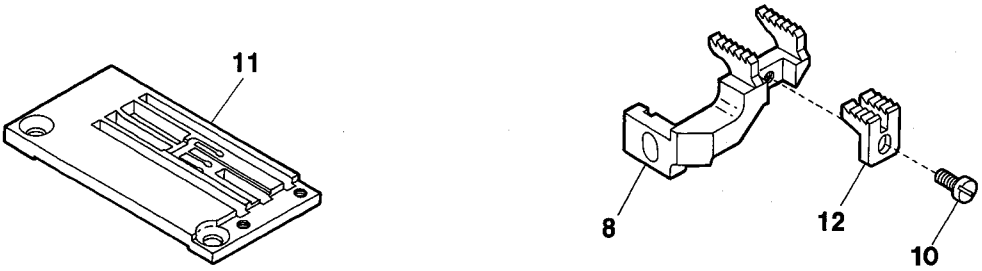


## EXTRA PARTS
## VG2713-140S-K4N, 148M-K4N

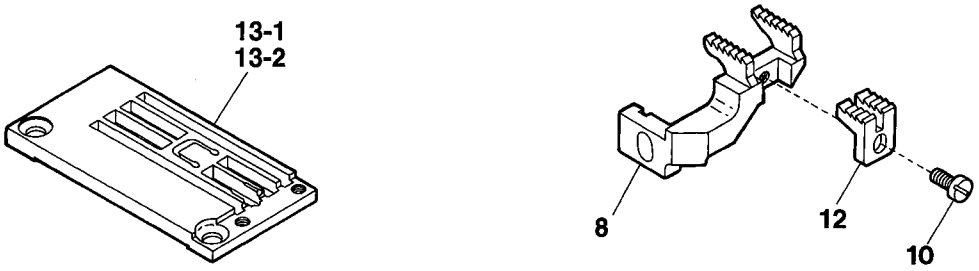

| Ref.No | Parts No. | Description | 品　名 | Amt. Req |
|---|---|---|---|---|
| 1-1 | 3107311 | Fabric Guide | 布ガイド | 1 |
| 1-2 | 3507091 ◆ | Fabric Guide(Long)(Extra Parts) | 布ガイド(長)(特注部品) | 1 |
| 2 | 110027 | Screw(M2.5-0.45 × 3.5) | 止ネジ | 1 |
| 3 | 3101320 | Fabric Guide(Left) | 布ガイド(左) | 1 |
| 4 | 3101321 | Fabric Guide(Rright) | 布ガイド(右) | 1 |
| 5 | 110027 [110038] | Screw(M2.5-0.45 × 3.5)[M2.5-0.45 × 4.5] | 止ネジ | 2 |
| 6 | 3500637 | Supplementary Block | 補助ブロック | 1 |
| 7-1 | 3508025 | Stitch Plate(48M-K1N) | 針板 | 1 |
| 7-2 | 3508026 | Stitch Plate(56M-K1N) | 針板 | 1 |
| 8 | 3509007 | Differential Feed Dog | 前送リ | 1 |
| 9 | 3509012 | Differential Feed Dog(Middle) | 中送リ | 1 |
| 10 | 110038 | Screw(M2.5-0.45 × 4.5) | 止ネジ | 1 |
| | | | | |
| 11 | 3508087 ◆ | Stitch Plate(56M-K4N) | 針板 | 1 |
| 12 | 3509010 | Differential Feed Dog(Middle) | 中送リ | 1 |
| 13-1 | 3508041 | Stitch Plate(40S-K4N) | 針板 | 1 |
| 13-2 | 3508086 ◆ | Stitch Plate(48M-K4N) | 針板 | 1 |

VG2713-□□□□-□□□-WF2

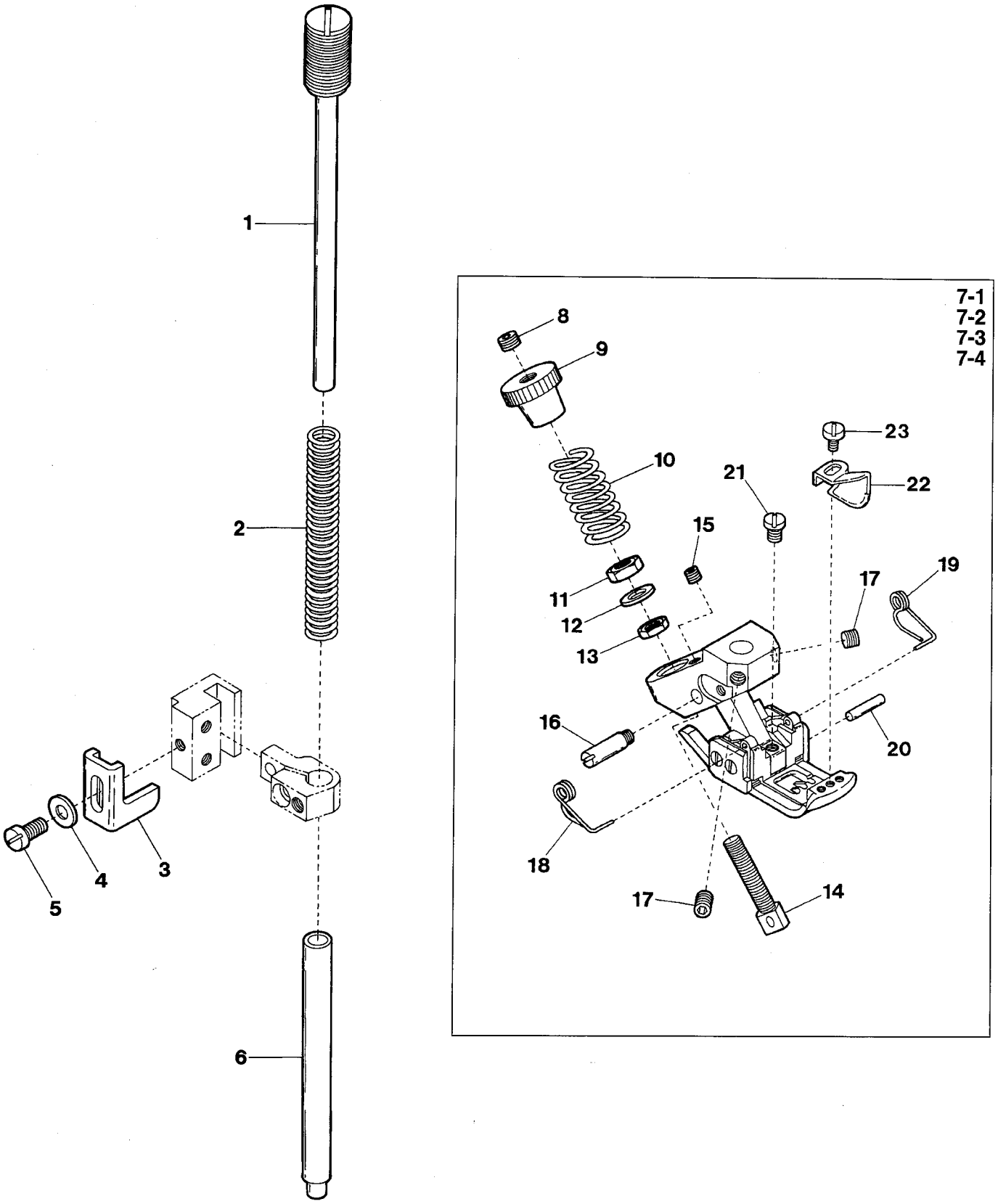

| Ref.No | Parts No. | Description | 品　名 | Amt. Req |
|---|---|---|---|---|
| 1 | 3500297 | Presser Spring Regulator | 押エ調節ネジ | 1 |
| 2 | 3200132 | Presser Bar Spring(Outer) | 押エ棒バネ(太) | 1 |
| 3 | 3101315 | Presser Bar Stopper | 押エ棒ストッパ | 1 |
| 4 | 000538 | Washer | ワッシャ | 1 |
| 5 | 004440 | Screw(11/64-40 × 8.3) | 止ネジ | 1 |
| 6 | 0093480 | Presser Bar | 押エ棒 | 1 |
| 7-1 | 3507072 | Walking Foot, C. Set(48) | ウォーキング押エ(組) | 1 |
| 7-2 | 3507074 | Walking Foot, C. Set(56) | ウォーキング押エ(組) | 1 |
| 7-3 | 3507070 | Walking Foot, C. Set(40)(2 Needle) | ウォーキング押エ(組) | 1 |
| 7-4 | 3507076 ◆ | Walking Foot, C. Set(64)(Extra Parts) | ウォーキング押エ(組) | 1 |
| 8 | 160001 | Screw(M4-0.7 × 4) | 止ネジ | 1 |
| 9 | 100052 | Nut | ナット | 1 |
| 10 | 3207148 | Presser Foot Spring | 押エバネ | 1 |
| | | | | |
| 11 | 100020 | Nut | ナット | 1 |
| 12 | 000665 | Washer | ワッシャ | 1 |
| 13 | 100057 | Nut | ナット | 1 |
| 14 | 3207146 | Adjusting Screw | 調節ネジ | 1 |
| 15 | 160025 | Screw(M3-0.5 × 6) | 止ネジ | 1 |
| 16 | 0060270 | Yoke Pin | 押エヨークピン | 1 |
| 17 | 160001 | Screw(M4-0.7 × 4) | 止ネジ | 2 |
| 18 | 3107303 | Presser Foot Spring(Left) | 小押エバネ(左) | 1 |
| 19 | 3107304 | Presser Foot Spring(Right) | 小押エバネ(右) | 1 |
| 20 | 3107306 | Presser Foot Hinge Pin | 押エヒンジピン | 1 |
| | | | | |
| 21 | 110084 | Screw(M3-0.5 × 4.2) | 止ネジ | 1 |
| 22 | 3107311 | Fabric Guide | 布ガイド | 1 |
| 23 | 110027 | Screw(M2.5-0.45 × 3.5) | 止ネジ | 1 |

VG2740, 2740P(1)

VG2740: Including in accessory/アクセサリに同梱
VG2740P: Fitted on machine/ミシン本体に装着

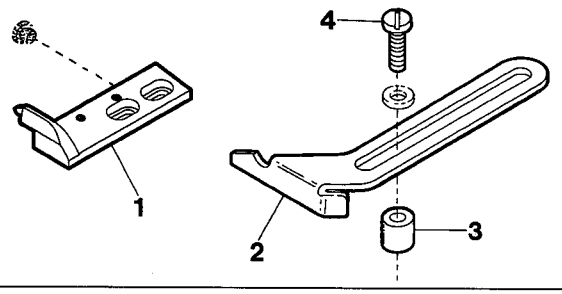


VG2740: Fitted on machine/ミシン本体に装着

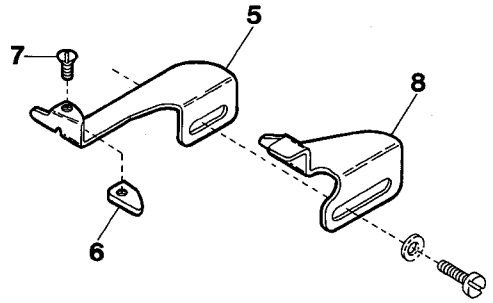


VG2740P: Including in accessory/アクセサリに同梱

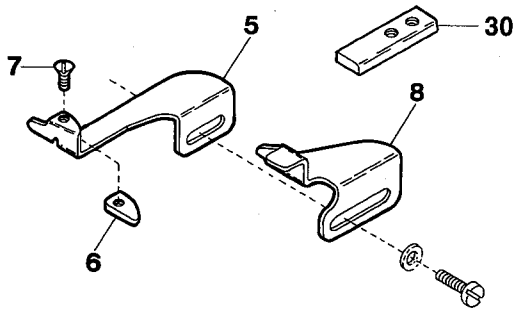


EXTRA PARTS

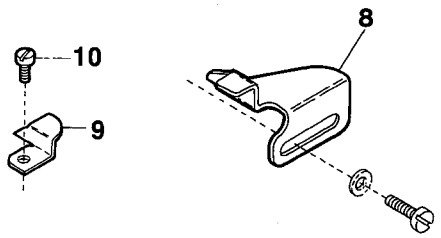


VG2740(P)-132S1, 132M, 140S1(2 Needle)

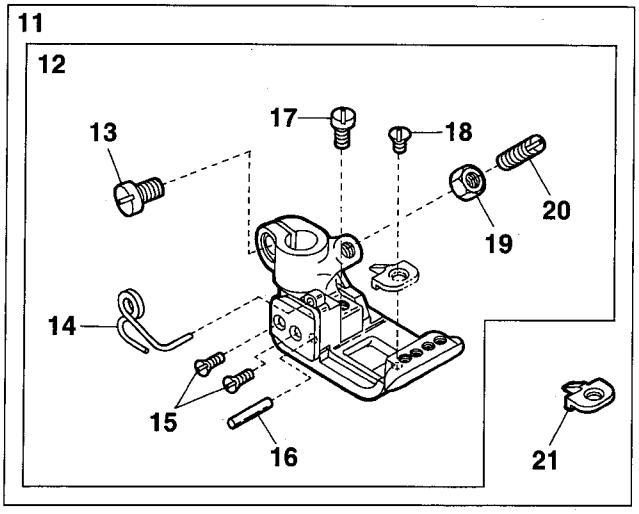


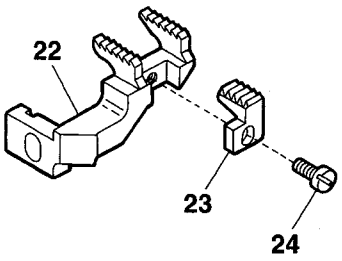


EXTRA PARTS
Stitch tongue of P. F. for using machine without spreader thread.
上飾りなし使用時の押エ爪

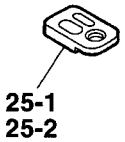


VG2740(P)-132S1, 140S1

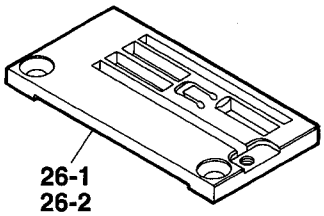


VG2740(P)-132M

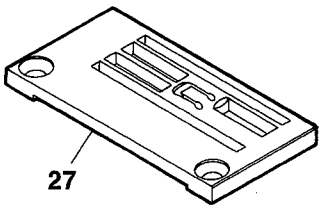


EXTRA PARTS

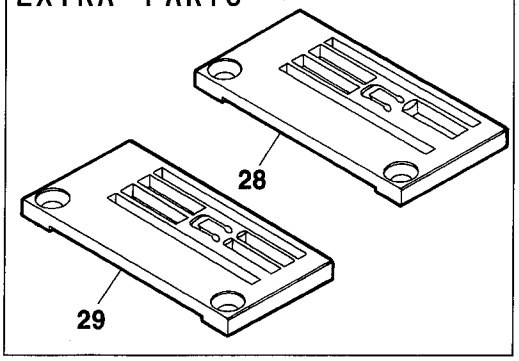

| Ref.No | Parts No. | | Description | 品　名 | Amt. Req |
|---|---|---|---|---|---|
| 1 | 3501302 | [3501298] | Fabric Guide(Left) | 布ガイド(左) | 1 |
| 2 | 3110073 | | Fabric Guide(Right) | 布ガイド(右) | 1 |
| 3 | 2100265 | | Spacer | スペーサ | 2 |
| 4 | 110010 | [110043] | Screw(M4-0.7 × 16)[M4-0.7 × 14] | 止ネジ | 2 |
| 5 | 3100630 | | Folder(Left) | 定規(左) | 1 |
| 6 | 0095367 | | Folder Chip | 定規チップ | 1 |
| 7 | 004182 | | Screw(3/32-56 × 2.5) | 止ネジ | 1 |
| 8 | 3100631 | | Folder(Right) | 定規(右) | 1 |
| 9 | 0094615 ◆ | | Fabric Edge Guide(Left)(Extra Parts) | 定規(左)(特注部品) | 1 |
| 10 | 001228 ◆ | | Screw(3/32-56 × 3.2)(Extra Parts) | 止ネジ(特注部品) | 1 |
| | | | | | |
| 11 | 3507060 | | Presser Foot, C. Set(1)(32, 40) | 押エ(組1) | 1 |
| 12 | 3507058 | | Presser Foot, C. Set | 押エ(組) | 1 |
| 13 | 110004 | | Screw(M3.5-0.6 × 8) | 止ネジ | 1 |
| 14 | 3107303 | | Presser Foot Spring(Left) | 小押エバネ(左) | 1 |
| 15 | 130016 | | Screw(M2.5-0.45 × 6) | 止ネジ | 2 |
| 16 | 3107306 | | Presser Foot Hinge Pin | 押エヒンジピン | 1 |
| 17 | 110084 | | Screw(M3-0.5 × 4.2) | 止ネジ | 1 |
| 18 | 004154 | | Screw(3/32-56 × 2.2) | 止ネジ | 1 |
| 19 | 000327 | | Lock Nut | ロックナット | 1 |
| 20 | 260006 | | Adjusting Screw(1/8-44 × 9.5) | 調節ネジ | 1 |
| | | | | | |
| 21 | 3507061 | | Presser Foot Stitch Tongue(32, 40) | 押エ爪 | 1 |
| 22 | 3509007 | | Differential Feed Dog | 前送リ | 1 |
| 23 | 3509025 | | Differential Feed Dog(Middle) | 中送リ | 1 |
| 24 | 110038 | | Screw(M2.5-0.45 × 4.5) | 止ネジ | 1 |
| 25-1 | 3507083 | | Presser Foot Stitch Tongue(32) | 押エ爪 | 1 |
| 25-2 | 3507084 | | Presser Foot Stitch Tongue(40) | 押エ爪 | 1 |
| 26-1 | 3508080 | | Stitch Plate(32S1)(2 Needle) | 針板 | 1 |
| 26-2 | 3508081 | | Stitch Plate(40S1)(2 Needle) | 針板 | 1 |
| 27 | 3508125 ◆ | | Stitch Plate(32M)(2 Needle) | 針板 | 1 |
| 28 | 3508126 ◆ | | Stitch Plate(40M)(2 Needle)(Extra Parts) | 針板(特注部品) | 1 |
| 29 | 3508136 ◆ | | Stitch Plate(32M)(2 Needle)(Extra Parts) | 針板(特注部品) | 1 |
| 30 | 3500255 ◆ | | Supplementary Block | 補助ブロック | 1 |

VG2740(P)-148S1, 148M, 156S1, 156M, 164S1, 164M

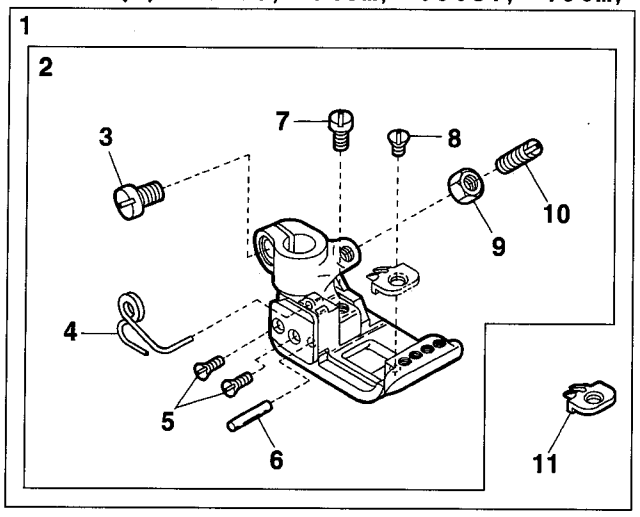


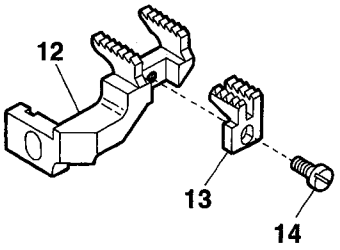


EXTRA PARTS
Stitch tongue of P. F. for using machine without spreader thread.
上飾りなし使用時の押エ爪

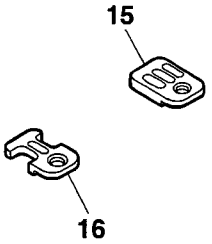


VG2740(P)-148S1, 156S1, 164S1

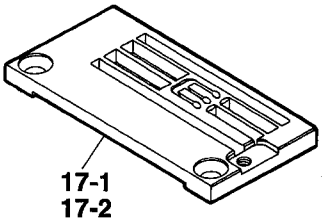


VG2740(P)-148M, 156M, 164M

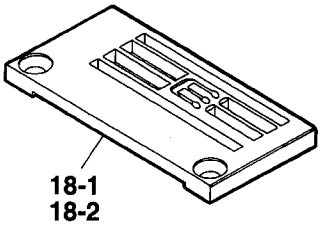

| Ref.No | Parts No. | Description | 品　名 | Amt. Req |
|---|---|---|---|---|
| 1 | 3507064 | Presser Foot, C. Set(1)(48, 56, 64) | 押エ(組1) | 1 |
| 2 | 3507058 | Presser Foot, C. Set | 押エ(組) | 1 |
| 3 | 110004 | Screw(M3.5-0.6 × 8) | 止ネジ | 1 |
| 4 | 3107303 | Presser Foot Spring(Left) | 小押エバネ(左) | 1 |
| 5 | 130016 | Screw(M2.5-0.45 × 6) | 止ネジ | 2 |
| 6 | 3107306 | Presser Foot Hinge Pin | 押エヒンジピン | 1 |
| 7 | 110084 | Screw(M3-0.5 × 4.2) | 止ネジ | 1 |
| 8 | 004154 | Screw(3/32-56 × 2.2) | 止ネジ | 1 |
| 9 | 000327 | Lock Nut | ロックナット | 1 |
| 10 | 260006 | Adjusting Screw(1/8-44 × 9.5) | 調節ネジ | 1 |
| | | | | |
| 11 | 3507065 | Presser Foot Stitch Tongue(48, 56, 64) | 押エ爪 | 1 |
| 12 | 3509007 | Differential Feed Dog | 前送リ | 1 |
| 13 | 3509026 | Differential Feed Dog(Middle) | 中送リ | 1 |
| 14 | 110038 | Screw(M2.5-0.45 × 4.5) | 止ネジ | 1 |
| 15 | 3507085 | Presser Foot Stitch Tongue(48) | 押エ爪 | 1 |
| 16 | 3507087 | Presser Foot Stitch Tongue(56, 64) | 押エ爪 | 1 |
| 17-1 | 3508082 | Stitch Plate(48S1) | 針板 | 1 |
| 17-2 | 3508083 | Stitch Plate(56S1) | 針板 | 1 |
| 17-3 | 3508084 | Stitch Plate(64S1) | 針板 | 1 |
| 18-1 | 3508127 ◆ | Stitch Plate(48M) | 針板 | 1 |
| 18-2 | 3508128 ◆ | Stitch Plate(56M) | 針板 | 1 |
| 18-3 | 3508129 ◆ | Stitch Plate(64M) | 針板 | 1 |

VG2740-156S1-WF1

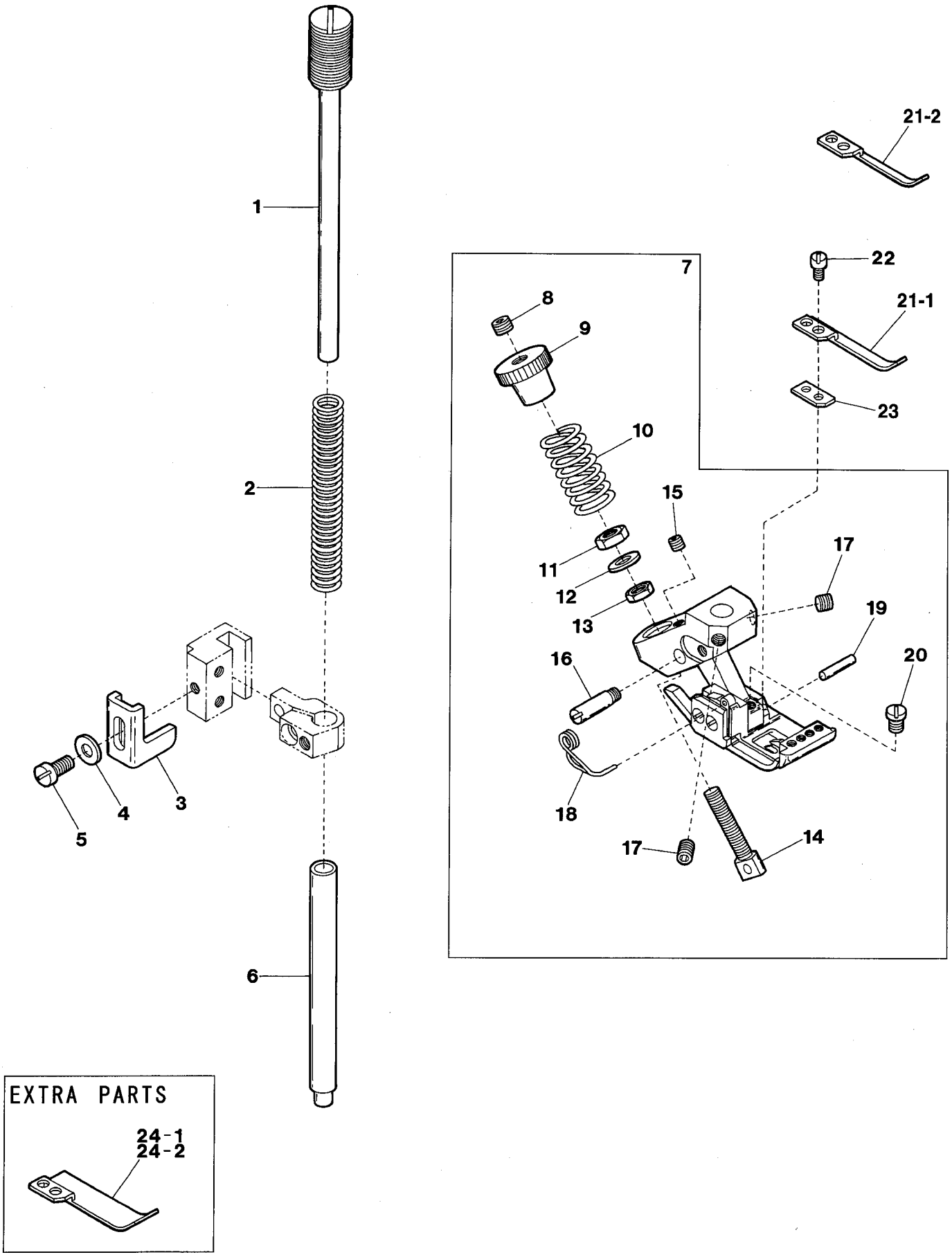

| Ref.No | Parts No. | Description | 品　名 | Amt. Req |
|---|---|---|---|---|
| 1 | 3500297 | Presser Spring Regulator | 押エ調節ネジ | 1 |
| 2 | 3200132 | Presser Bar Spring(Outer) | 押エ棒バネ(太) | 1 |
| 3 | 3101315 | Presser Bar Stopper | 押エ棒ストッパ | 1 |
| 4 | 000538 | Washer | ワッシャ | 1 |
| 5 | 004440 | Screw(11/64-40 × 8.3) | 止ネジ | 1 |
| 6 | 0093480 | Presser Bar | 押エ棒 | 1 |
| 7 | 3107270 | Walking Foot, C. Set(56) | ウォーキング押エ(組) | 1 |
| 8 | 160001 | Screw(M4-0.7 × 4) | 止ネジ | 1 |
| 9 | 100052 | Nut | ナット | 1 |
| 10 | 3207145 | Presser Foot Spring | 押エバネ | 1 |
| | | | | |
| 11 | 100020 | Nut | ナット | 1 |
| 12 | 000665 | Washer | ワッシャ | 1 |
| 13 | 100057 | Nut | ナット | 1 |
| 14 | 3207146 | Adjusting Screw | 調節ネジ | 1 |
| 15 | 160025 | Screw(M3-0.5 × 6) | 止ネジ | 1 |
| 16 | 0060270 | Yoke Pin | 押エヨークピン | 1 |
| 17 | 160001 | Screw(M4-0.7 × 4) | 止ネジ | 2 |
| 18 | 3107303 | Presser Foot Spring(Left) | 小押エバネ(左) | 1 |
| 19 | 3107306 | Presser Foot Hinge Pin | 押エヒンジピン | 1 |
| 20 | 110084 | Screw(M3-0.5 × 4.2) | 止ネジ | 1 |
| | | | | |
| 21-1 | 3107272 | Fabric Presser(width 6.2mm) | 布押エ | 1 |
| 21-2 | 3107273 | Fabric Presser(width 3.1mm)(Accesary) | 布押エ(付属品) | 1 |
| 22 | 001228 | Screw(3/32-56 × 3.2) | 止ネジ | 2 |
| 23 | 3110201 | Spacer(Extra Parts) | スペーサ(特注部品) | 1 |
| 24-1 | 3107274 | FabricPresser(width12.6mm)(ExtraParts) | 布押エ(特注部品) | 1 |
| 24-2 | 3107285 | FabricPreaaer(Width37.2mm)(ExtraParts) | 布押エ(特注部品) | 1 |

VG2740(P)-140M-SM, 148M-SM

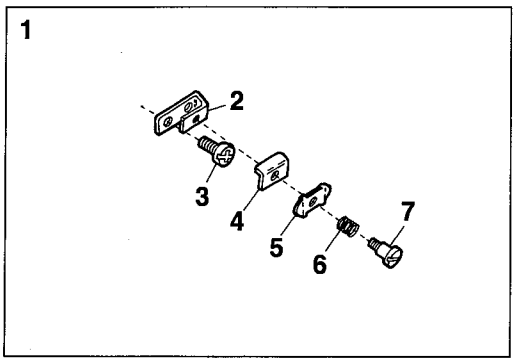


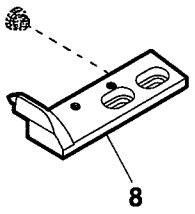


VG2740(P)-140M-SM

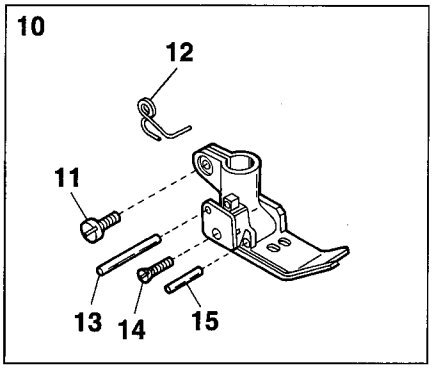


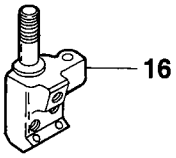


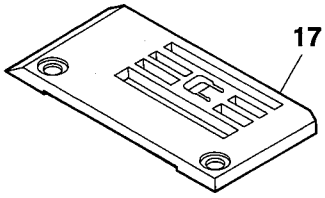


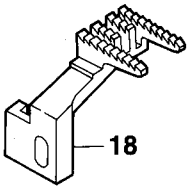


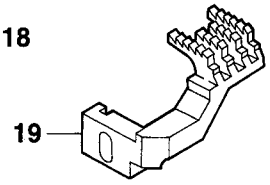


VG2740(P)-148M-SM

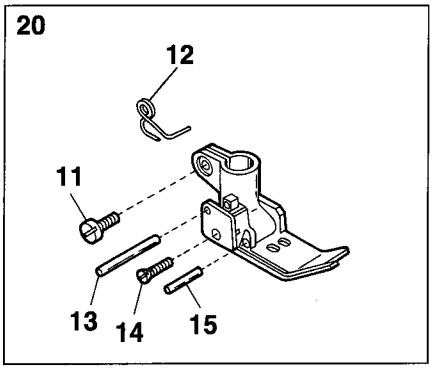


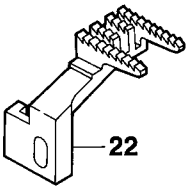


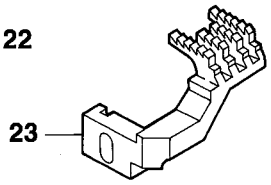


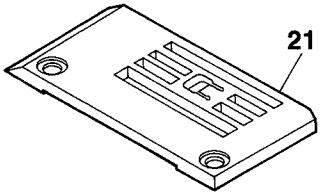

| Ref.No | Parts No. | Description | 品　名 | Amt. Req |
|---|---|---|---|---|
| 1 | 3103000 | Needle Thread Retainer Support, C. Set | 小調子台(組) | 1 |
| 2 | 3100087 | Needle Thread Retainer Support | 小調子台 | 1 |
| 3 | 110013 | Screw(M4-0.7 × 8) | 止ネジ | 1 |
| 4 | 0036175 | Thread Retainer Disc Support | 小調子板 | 1 |
| 5 | 0032425 | Needle Thread Retainer Dice | 小調子皿 | 1 |
| 6 | 0032426 | Needle Thread Retainer Spring | 小調子バネ | 1 |
| 7 | 001093 | Screw(1/8-44 × 2.2) | 止ネジ | 1 |
| 8 | 3501302 | Fabric Edge Guide(Left) | 定規(左) | 1 |
| 9 | | | | |
| 10 | 0093415 | Presser Foot, C. Set(40) | 押エ(組) | 1 |
| | | | | |
| 11 | 001186 | Screw(9/64-40 × 7.8) | 止ネジ | 1 |
| 12 | 3107304 | Presser Foot Spring | 小押エバネ | 1 |
| 13 | 0065366 | Locking Pin | 回り止メピン | 1 |
| 14 | 0063282 | Presser Foot Hinge Pin | 押エヒンジピン | 1 |
| 15 | 005122 | Screw(3/32-56 × 5.5) | 止ネジ | 1 |
| 16 | 0093352 | Needle Clamp(40) | 針止メ | 1 |
| 17 | 0093410 | Stitch Plate(40M) | 針板 | 1 |
| 18 | 3109042 | Main Feed Dog(40) | 後送り | 1 |
| 19 | 3139006 | Differential Feed Dog(40) | 前送り | 1 |
| 20 | 0093421 | Presser Foot, C. Set(48) | 押エ(組) | 1 |
| | | | | |
| 21 | 0093417 | Stitch Plate(48M) | 針板 | 1 |
| 22 | 3109044 | Main Feed Dog(48) | 後送り | 1 |
| 23 | 3139007 | Differential Feed Dog(48) | 前送り | 1 |

VG2760

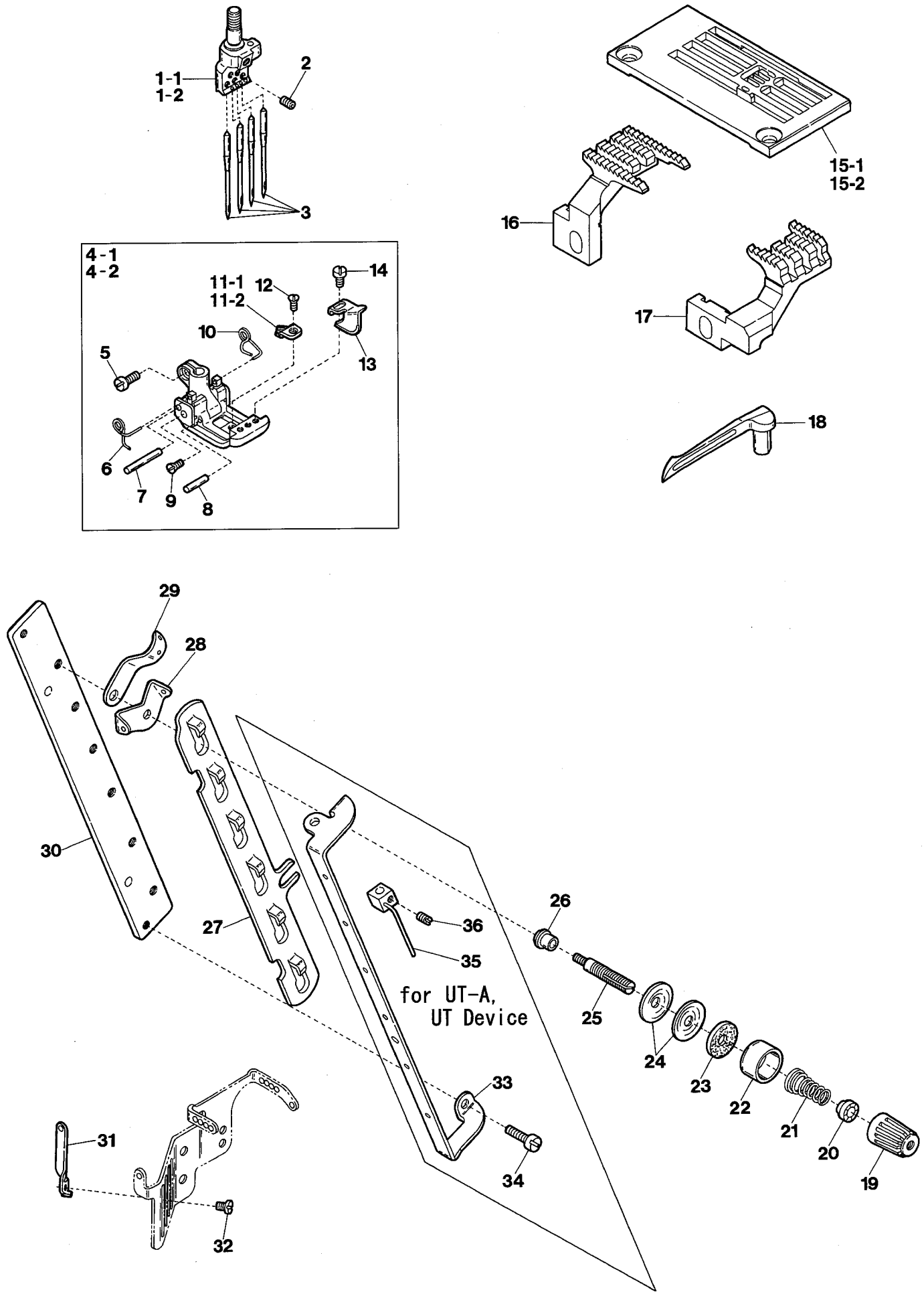
1-1
1-2
2
3
4-1
4-2
11-1
11-2
12
14
10
5
13
6
7
9
8
15-1
15-2
16
17
18
29
28
30
27
26
36
35
for UT-A,
UT Device
25
24
23
22
21
20
19
33
34
31
32

| Ref.No | Parts No. | Description | 品　名 | Amt. Req |
|---|---|---|---|---|
| 1-1 | 3209121 | Needle Clamp(56) | 針止メ | 1 |
| 1-2 | 3209122 | Needle Clamp(64) | 針止メ | 1 |
| 2 | 160033 | Screw(M2.5-0.45 × 3) | 止ネジ | 4 |
| 3 | ———— | Needle(MY1014H) | 針 | 4 |
| 4-1 | 3207039 | Presser Foot, C. Set(56) | 押エ(組) | 1 |
| 4-2 | 3207040 | Presser Foot, C. Set(64) | 押エ(組) | 1 |
| 5 | 001186 | Screw(9/64-40 × 7.8) | 止ネジ | 1 |
| 6 | 3107303 | Presser Foot Spring(Left) | 小押エバネ(左) | 1 |
| 7 | 0063284 | Presser Foot Guide Pin | 小押エガイドピン | 1 |
| 8 | 0063282 | Presser Foot Hinge Pin | 押エヒンジピン | 1 |
| 9 | 005122 | Screw(3/32-56 × 5.5) | 止ネジ | 1 |
| 10 | 3107304 | Presser Foot Spring(Right) | 小押エバネ(右) | 1 |
| | | | | |
| 11-1 | 3207044 | Presser Foot Tongue(56) | 押エ爪 | 1 |
| 11-2 | 3207045 | Presser Foot Tongue(64) | 押エ爪 | 1 |
| 12 | 004182 | Screw(3/32-56 × 2.5) | 止ネジ | 1 |
| 13 | 3207046 | Fabric Guide | 布ガイド | 1 |
| 14 | 110027 | Screw(M2.5-0.45 × 3.5) | 止ネジ | 1 |
| 15-1 | 3508077 | Stitch Plate(56S3) | 針板 | 1 |
| 15-2 | 3508078 | Stitch Plate(64S3) | 針板 | 1 |
| 16 | 3509023 | Main Feed Dog | 後送リ | 1 |
| 17 | 3509022 | Differential Feed Dog | 前送リ | 1 |
| 18 | 3109306 | Looper | ルーパ | 1 |
| 19 | 0024084 | Thread Tension Spring Cap | 糸調子バネキャップ(上) | 1 |
| 20 | 0024083 | Tension Spring Bushing | 糸調子ナット回リ止メ | 1 |
| | | | | |
| 21 | 0030255 | Tension Spring(Needle) | 糸調子バネ(針糸) | 1 |
| 22 | 0090071 | Thread Tension Spring Retainer | 糸調子バネキャップ(下) | 1 |
| 23 | 000177 | Felt | フェルト | 1 |
| 24 | 0031111 | Tension Disc | 糸調子皿 | 2 |
| 25 | 290029 | Tension Post | 糸調子棒 | 1 |
| 26 | 0090812 | Tension Post Ferrule | 糸調子棒糸摺レ | 1 |
| 27 | 3100417 | Tension Disc Separator | 糸緩メ板 | 1 |
| 28 | 0090856 | Tension Disc Eyelet | 糸調子皿糸道 | 1 |
| 29 | 0090807 | Thread Lead-in Guide | 糸調子台糸道 | 1 |
| 30 | 3100416 | Tension Post Support | 糸調子台 | 1 |
| | | | | |
| 31 | 3500282 | Needle Thread Eyelet | 針糸道 | 1 |
| 32 | 110054 | Screw(M3-0.5 × 3.5) | 止ネジ | 1 |
| 33 | 3100418 | Thread Pull-off Eyelet | 糸緩メ糸道 | 1 |
| 34 | 110012 | Screw(M4-0.7 × 5) | 止ネジ | 2 |
| 35 | 3500514 | Thread Pull-off Hook Unit | 糸緩メフック(組) | 1 |
| 36 | 003657 [160001] | Screw(M4-0.7 × 3)[M4-0.7 × 4] | 止ネジ | 1 |

# EC DEVICE(1)

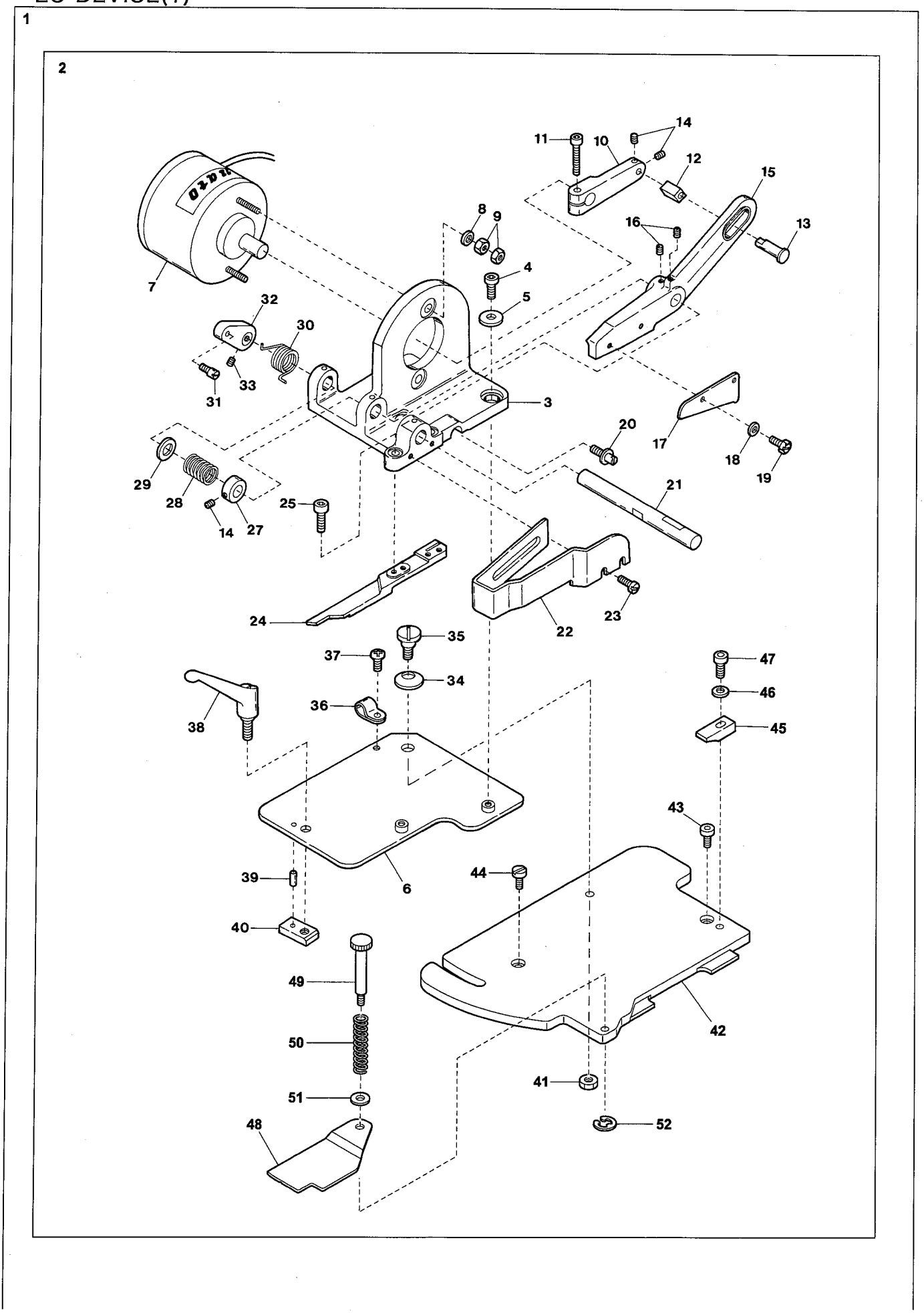
1
2
11
10
14
12
15
13
16
8
9
4
5
7
32
30
33
31
3
20
17
18
19
29
28
14
27
25
21
24
22
23
35
37
34
47
46
45
38
36
43
39
6
44
40
49
42
50
41
51
52
48

| Ref.No | Parts No. | Description | 品　名 | Amt. Req |
|---|---|---|---|---|
| 1 | 3509969 | EC Device, Complete Set | EC装置(組) | 1 |
| 2 | 3501181 | Cutting Device, C. Set | カッタ装置(組) | 1 |
| 3 | 3501182 | Cutting Device Basement | カッタ装置台 | 1 |
| 4 | 120010 | Screw(M6-1 × 10) | 止ネジ | 2 |
| 5 | 300047 | Washer | ワッシャ | 2 |
| 6 | 3101438 | Cutting Device Basement Holder | カッタ装置台取付板 | 1 |
| 7 | 0011789 | Solenoid | ソレノイド | 1 |
| 8 | 000528 | Washer | ワッシャ | 2 |
| 9 | 000011 | Nut | ナット | 4 |
| 10 | 0092288 | Cutting Knife Connecting Lever | カッタ腕 | 1 |
| | | | | |
| 11 | 005115 | Screw(1/4-28 × 19) | 止ネジ | 1 |
| 12 | 0092286 | Sliding Block | 角駒 | 1 |
| 13 | 0092287 | Sliding Block Pin | 角駒軸 | 1 |
| 14 | 003638 | Screw(11/64-40 × 4) | 止ネジ | 3 |
| 15 | 3101443 | Upper Cutting Knife Holder | カッタ(上)ホルダ | 1 |
| 16 | 003670 | Screw(7/32-32 × 6.3) | 止ネジ | 2 |
| 17 | 3201105 | Upper Cutting Knife | カッタ(上) | 1 |
| 18 | 000538 | Washer | ワッシャ | 2 |
| 19 | 002308 | Screw(11/64-40 × 10.4) | 止ネジ | 2 |
| 20 | 290035 | Adjusting Screw(11/64-40 × 11.5) | 調節ネジ | 1 |
| | | | | |
| 21 | 0092283 | Upper Cutting Knife Holder Shaft | カッタ(上)ホルダ軸 | 1 |
| 22 | 3101442 | Cutting Knife Cover | カッタカバー | 1 |
| 23 | 004406 | Screw(11/64-40 × 8) | 止ネジ | 2 |
| 24 | 3501183 | Lower Cutting Knife | カッタ(下) | 1 |
| 25 | 005550 | Screw(11/64-40 × 13.5) | 止ネジ | 2 |
| 26 | | | | |
| 27 | 0092294 | Collar(10 × 18 × 7.5mm) | カラー | 1 |
| 28 | 0092292 | Press Spring | カッタ(上)押シバネ | 1 |
| 29 | 000498 | Washer | ワッシャ | 1 |
| 30 | 0092291 | Return Spring | カッタ(上)戻シバネ | 1 |
| | | | | |
| 31 | 005512 | Screw(11/64-40 × 3) | 止ネジ | 1 |
| 32 | 0092293 | Return Spring Latch | バネ掛ケ | 1 |
| 33 | 003635 | Screw(1/4-40 × 6) | 止ネジ | 1 |
| 34 | 000621 | Washer | ワッシャ | 1 |
| 35 | 170031 | Screw(M5-0.8 × 12.4(8.4)) | 止ネジ | 1 |
| 36 | 0060248 | Cord Clamp(3N- φ 5.3) | コードクランプ | 1 |
| 37 | 110012 | Screw(M4-0.7 × 5) | 止ネジ | 1 |
| 38 | 2114124 | Clamp Lever | クランプレバー | 1 |
| 39 | 340014 | Roll Pin | ロールピン | 1 |
| 40 | 3101439 | Clamp Lever Fixing Plate | クランプレバー固定板 | 1 |

Ref. No. 41 to 52　See the following page.

# EC DEVICE(1)

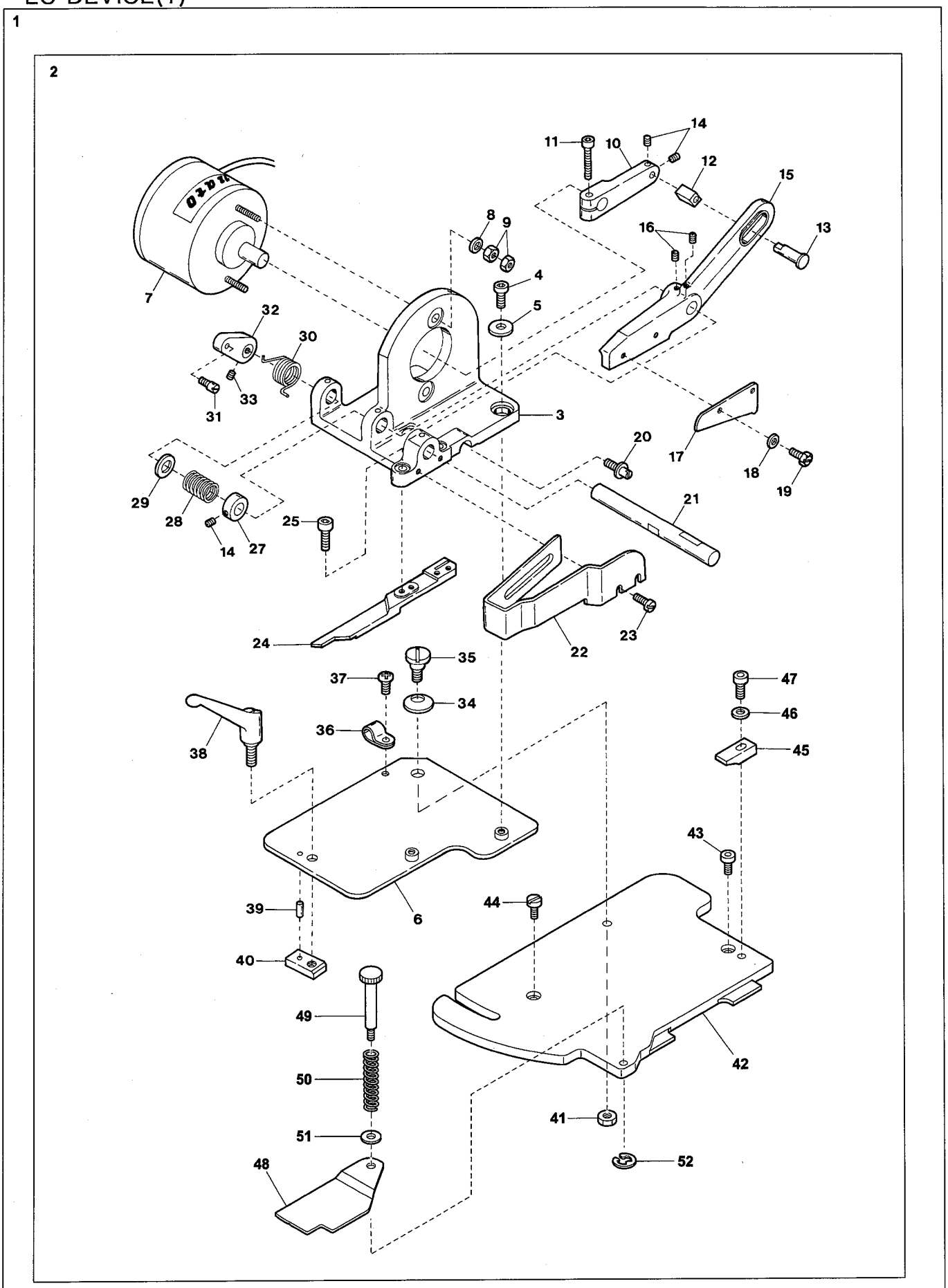
1
2
7
11
10
14
12
15
8
9
16
13
4
5
32
30
33
31
3
20
17
18
19
29
28
14
27
25
21
24
22
23
35
37
34
36
38
47
46
45
43
39
6
44
40
49
50
51
48
42
41
52

| Ref.No | Parts No. | Description | 品　名 | Amt. Req |
|---|---|---|---|---|
| 41 | 000009 | Nut | ナット | 1 |
| 42 | 3501185 | Cloth Plate(Large) | クロスプレート(大) | 1 |
| 43 | 120009 | Screw(M4-0.7 × 12) | 止ネジ | 1 |
| 44 | 110031 | Screw(M4-0. 7 × 12) | 止ネジ | 1 |
| 45 | 3101444 | Stopper | ストッパ | 1 |
| 46 | 000538 | Washer | ワッシャ | 1 |
| 47 | 007610 | Screw(M4-0.7 × 10) | 止ネジ | 1 |
| 48 | 3502022 | Cloth Plate(Small) | クロスプレート(小) | 1 |
| 49 | 190092 | Screw(M5-0.8 × 46.3) | 止ネジ | 1 |
| 50 | 3501187 | Cloth Plate(Small) Spring | クロスプレート(小)バネ | 1 |
| | | | | |
| 51 | 000426 | Washer | ワッシャ | 1 |
| 52 | 0077179 | Retaining Ring | ストップリング | 1 |

# EC DEVICE(2)

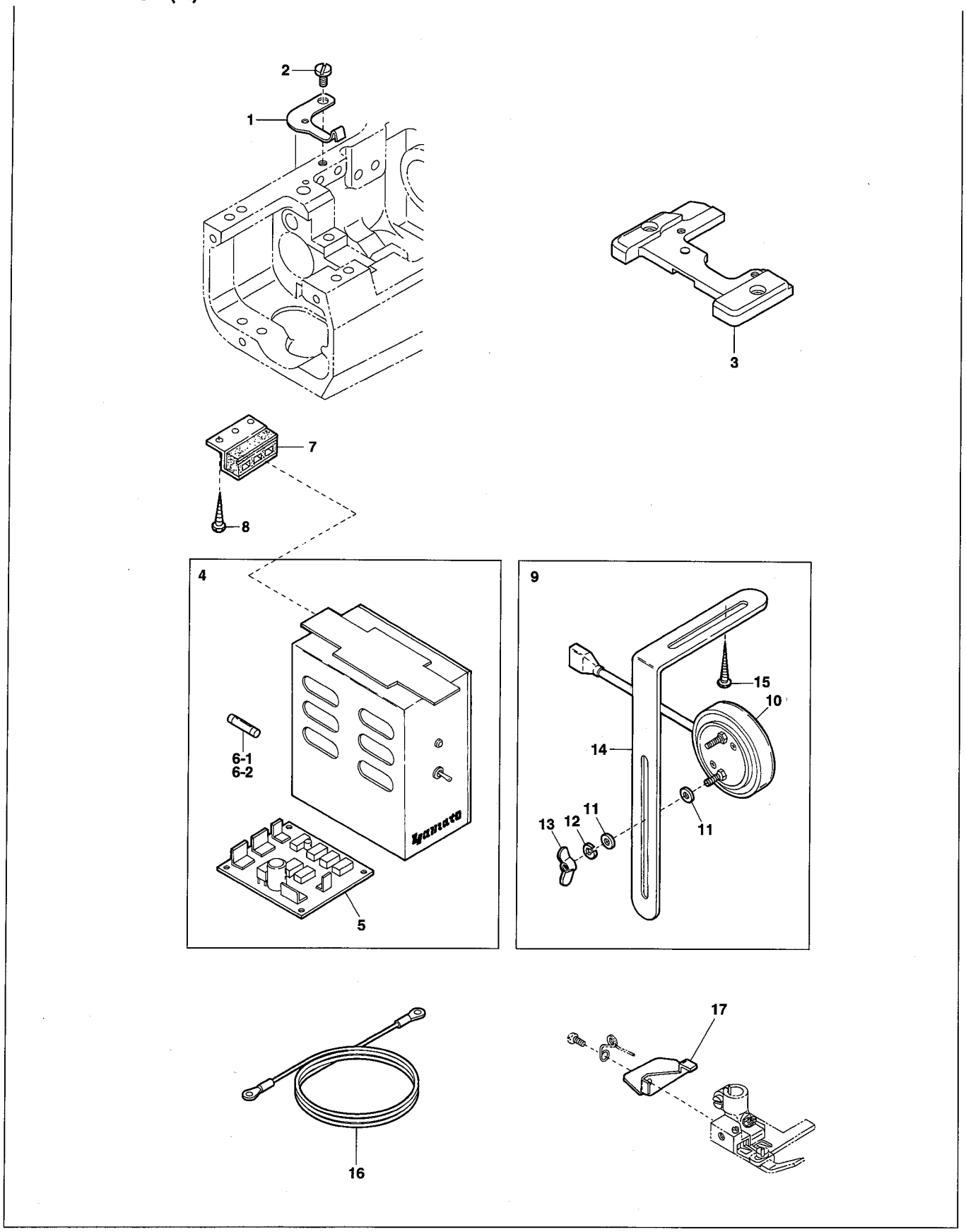

| Ref.No | Parts No. | Description | 品　名 | Amt. Req |
|---|---|---|---|---|
| 1 | 3502023 | Cloth Plate(Small) Support | クロスプレート(小)支エ | 1 |
| 2 | 110001 | Screw(M4-0.7 × 5.4) | 止ネジ | 1 |
| 3 | 3502021 | Stitch Plate Holder | 針板台 | 1 |
| 4 | 0011957 | Control Box, Complete Set | 制御装置(組) | 1 |
| 5 | 0011952 | Control Board | 制御基板 | 1 |
| 6-1 | 0010938 | Fuse(100V) | ヒューズ | 1 |
| 6-2 | 1070020 | Fuse(200V) | ヒューズ | 1 |
| 7 | 0011709 | Control Box Stay | 制御ボックススティ | 2 |
| 8 | 006905 | Wood Screw(φ 5.1 × 20) | 木ネジ | 4 |
| 9 | 0010565 | Knee Switch, Complete Set | 膝スイッチ(組) | 1 |
| 10 | 0010564 | Knee Switch | 膝スイッチ | 1 |
| | | | | |
| 11 | 300031 | Washer | ワッシャ | 4 |
| 12 | 300033 | Spring Washer | スプリングワッシャ | 2 |
| 13 | 100038 | Wing Nut | チョウナット | 2 |
| 14 | 0092232 | Knee Switch Holder | 膝スイッチ取付板 | 1 |
| 15 | 006910 | Wood Screw(φ 6.8 × 26) | 木ネジ | 2 |
| 16 | 0011303 | Earthed Line | アース線 | 1 |
| 17 | 3101447 | Fabric Guide | テープ案内板 | 1 |
| 18 | 3508208 | Stitch Plate(56M) | 針板 | 1 |

## EL1 DEVICE

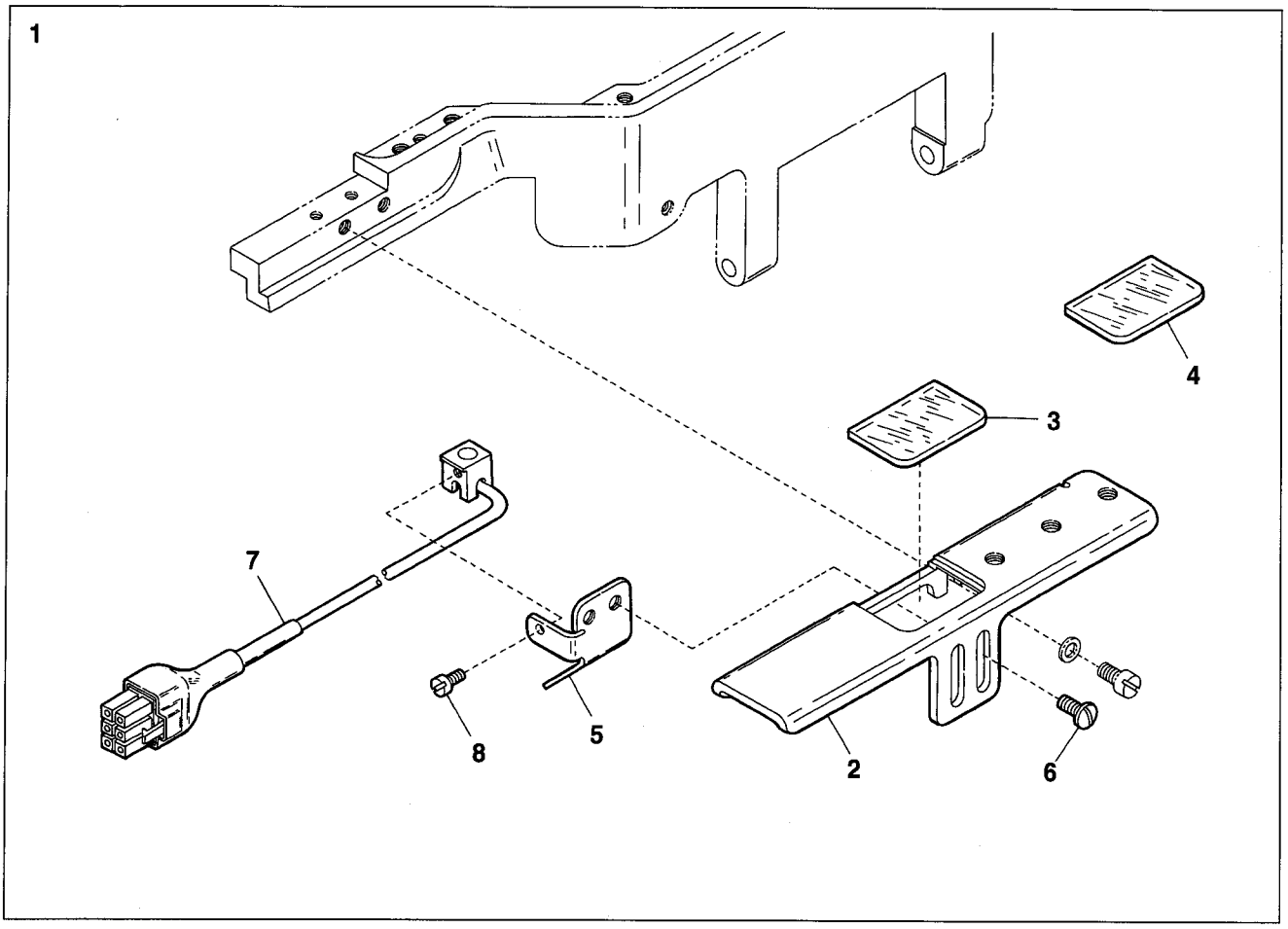

| Ref.No | Parts No. | Description | 品　名 | Amt. Req |
|---|---|---|---|---|
| 1 | 3500670 | EL1 Device, C. Set | EL1 装置(組) | 1 |
| 2 | 3500671 | Supplementary Cover | 補助カバー | 1 |
| 3 | 3500675 | Lamp Cover(Green)(Standard) | ランプカバー(緑)(標準) | 1 |
| 4 | 3500676 | Lamp Cover | ランプカバー | 1 |
| 5 | 3500672 | Light Emitter Holder | 投光台 | 1 |
| 6 | 110106 | Screw(M4-0.7 × 8) | 止ネジ | 2 |
| 7 | 1200309 | Light Emitter | 投光器 | 1 |
| 8 | 004236 | Screw(3/32-56 × 4.2) | 止ネジ | 1 |

# EXTRA PARTS

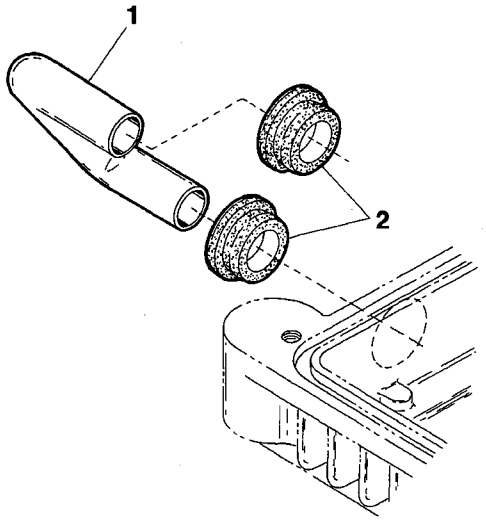


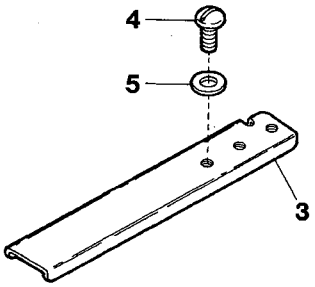


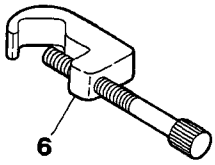


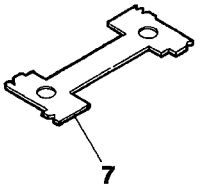


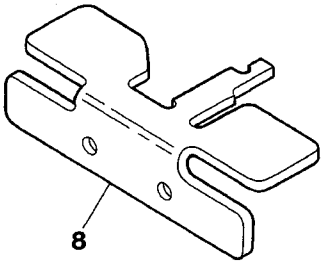


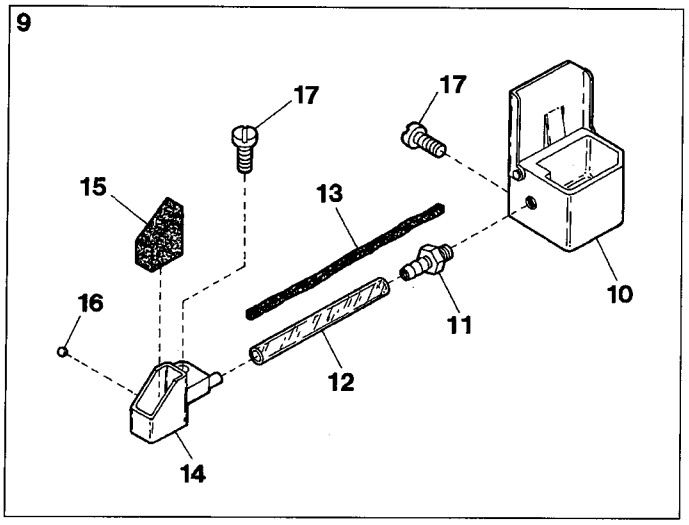


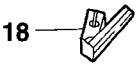


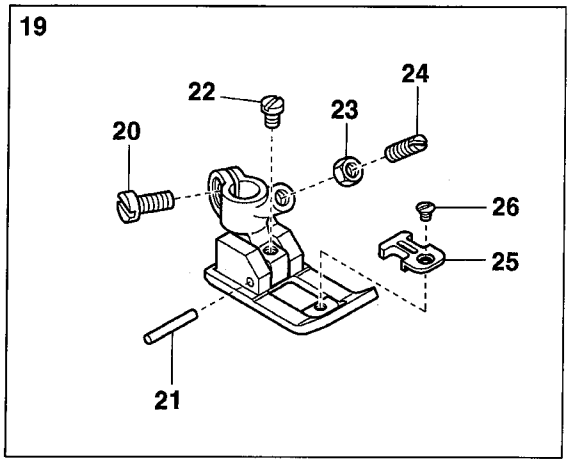


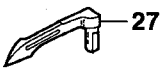

| Ref.No | Parts No. | Description | 品　名 | Amt. Req |
|---|---|---|---|---|
| 1 | 3500603 | Self-cleaning Pipe | セルフクリーニングパイプ | 1 |
| 2 | 3500605 | Pipe Holder | パイプホルダ | 2 |
| 3 | 3100033 | Supplementary Front Cover | 補助カバー | 1 |
| 4 | 110105 | Screw(M5-0.8 × 12) | 止ネジ | 2 |
| 5 | 000426 | Washer | ワッシャ | 2 |
| 6 | 0093690 | Timing Gauge | タイミングゲージ | 1 |
| 7 | 0095220 | Looper Timing Gauge | ルーパタイミングゲージ | 1 |
| 8 | 3500493 | Timing Gauge | タイミングゲージ | 1 |
| 9 | 3100256 | HR Device, Complete Set | HR装置(組) | 1 |
| 10 | 3100254 | HR Container | HRタンク | 1 |
| | | | | |
| 11 | 1090190 | Pipe Joint | パイプ継手 | 1 |
| 12 | 3100253 | Oil Tube | 給油パイプ | 1 |
| 13 | 310007 | Felt(2.5 × 2.5 × 100mm) | フェルト | 1 |
| 14 | 3100250 | HR Cup | HRカップ | 1 |
| 15 | 310006 | HR Felt | HRフェルト | 1 |
| 16 | 000637 | Seal Plug | 詰栓 | 1 |
| 17 | 110013 | Screw(M4-0.7 × 8) | 止ネジ | 2 |
| 18 | 3109210 ◆ | Needle Guard(Rear)(an angle of 23°) | 針受ケ(後)(角度23°) | 1 |
| 19 | 3507095 ◆ | Presser Foot, C. Set(56, 64) | 押エ(組) | 1 |
| 20 | 110004 ◆ | Screw(M3.5-0.6 × 8) | 止ネジ | 1 |
| | | | | |
| 21 | 3507097 ◆ | Presser Foot Hinge Pin | 押エヒンジピン | 1 |
| 22 | 110084 ◆ | Screw(M3-0.5 × 4.2) | 止ネジ | 1 |
| 23 | 000327 ◆ | Lock Nut | ロックナット | 1 |
| 24 | 260006 ◆ | Adjusting Screw(1/8-44 × 9.5) | 調節ネジ | 1 |
| 25 | 3507087 ◆ | Presser Foot Stitch Tongue(56, 64) | 押エ爪 | 1 |
| 26 | 004154 ◆ | Screw(3/32-56 × 2.2) | 止ネジ | 1 |
| 27 | 3109301 ◆ | Looper(hard plating) | ルーパ(硬質メッキ) | 1 |

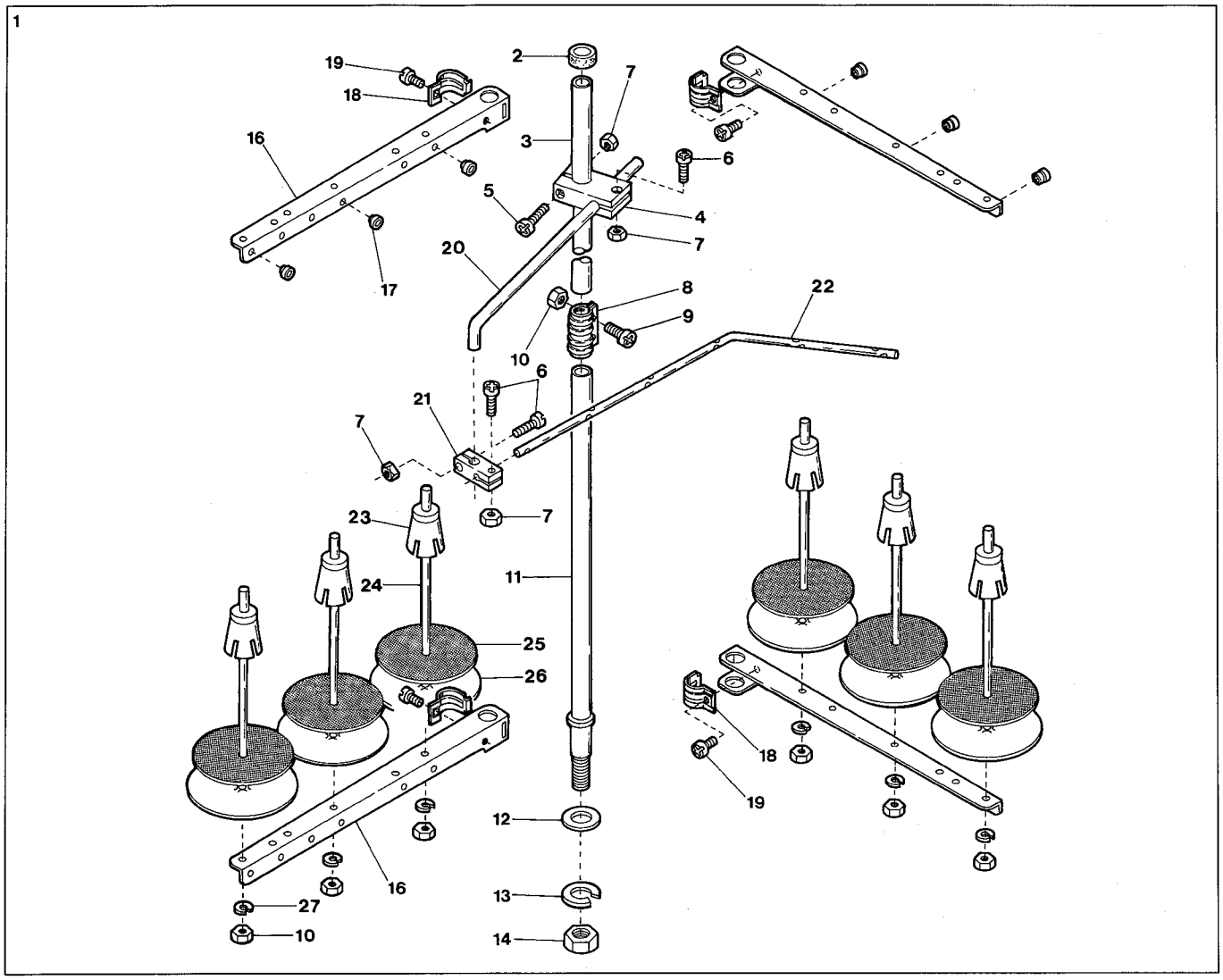
1
19
18
16
17
2
7
3
6
5
4
7
20
8
9
22
10
6
21
7
7
23
24
11
25
26
18
19
12
16
13
27
10
14

| Ref.No | Parts No. | Description | 品　名 | Amt. Req |
|---|---|---|---|---|
| 1 | 9620696 | Thread Stand, C. Set(6 Spools Type) | 糸立台(組)(6本糸用) | 1 |
| 2 | 9620631 | Column Cap | コラムキャップ | 1 |
| 3 | 9620670 | Column Cap(Upper) | コラムパイプ(上) | 1 |
| 4 | 9620689 | Thread Guide Holder(Large) | ガイドホルダ(大) | 1 |
| 5 | 911002 | Screw(M4-0.7 × 20) | 止ネジ | 1 |
| 6 | 911001 | Screw(M4-0.7 × 12) | 止ネジ | 3 |
| 7 | 910001 | Nut | ナット | 4 |
| 8 | 9620673 | Column Pipe Connector | コラムパイプ継手 | 1 |
| 9 | 911006 | Screw(M5-0.8 × 13) | 止ネジ | 2 |
| 10 | 910000 | Nut | ナット | 8 |
| | | | | |
| 11 | 9620675 | Column Pipe(Lower) | コラムパイプ(下) | 1 |
| 12 | 930052 | Washer | ワッシャ | 1 |
| 13 | 930053 | Spring Washer | スプリングワッシャ | 1 |
| 14 | 910003 | Nut | ナット | 1 |
| 15 | | | | |
| 16 | 9620703 | Thread Hanger(3 Spools Type) | スレッドハンガ(3本糸用) | 4 |
| 17 | 9620700 | Thread Eyelet | アイレット | 6 |
| 18 | 9620688 | Thread Hanger Holder | スレッドハンガ抱キ | 4 |
| 19 | 911060 | Screw(M6-1 × 15) | 止ネジ | 4 |
| 20 | 9620691 | Thread Guide Arm | ガイドアーム | 1 |
| | | | | |
| 21 | 9620690 | Thread Guide Holder(Small) | ガイドホルダ(小) | 1 |
| 22 | 9620666 | Thread Guide(6 Spools Type) | スレッドガイド(6本糸用) | 1 |
| 23 | 9620678 | Spool Cushion | スプールクッション | 6 |
| 24 | 9620679 | Spool Pin | スプール軸 | 6 |
| 25 | 9620680 | Spool Mat | スプールマット | 6 |
| 26 | 9620681 | Spool Seat Disc | 受ケ皿 | 6 |
| 27 | 930055 | Spring Washer | スプリングワッシャ | 6 |

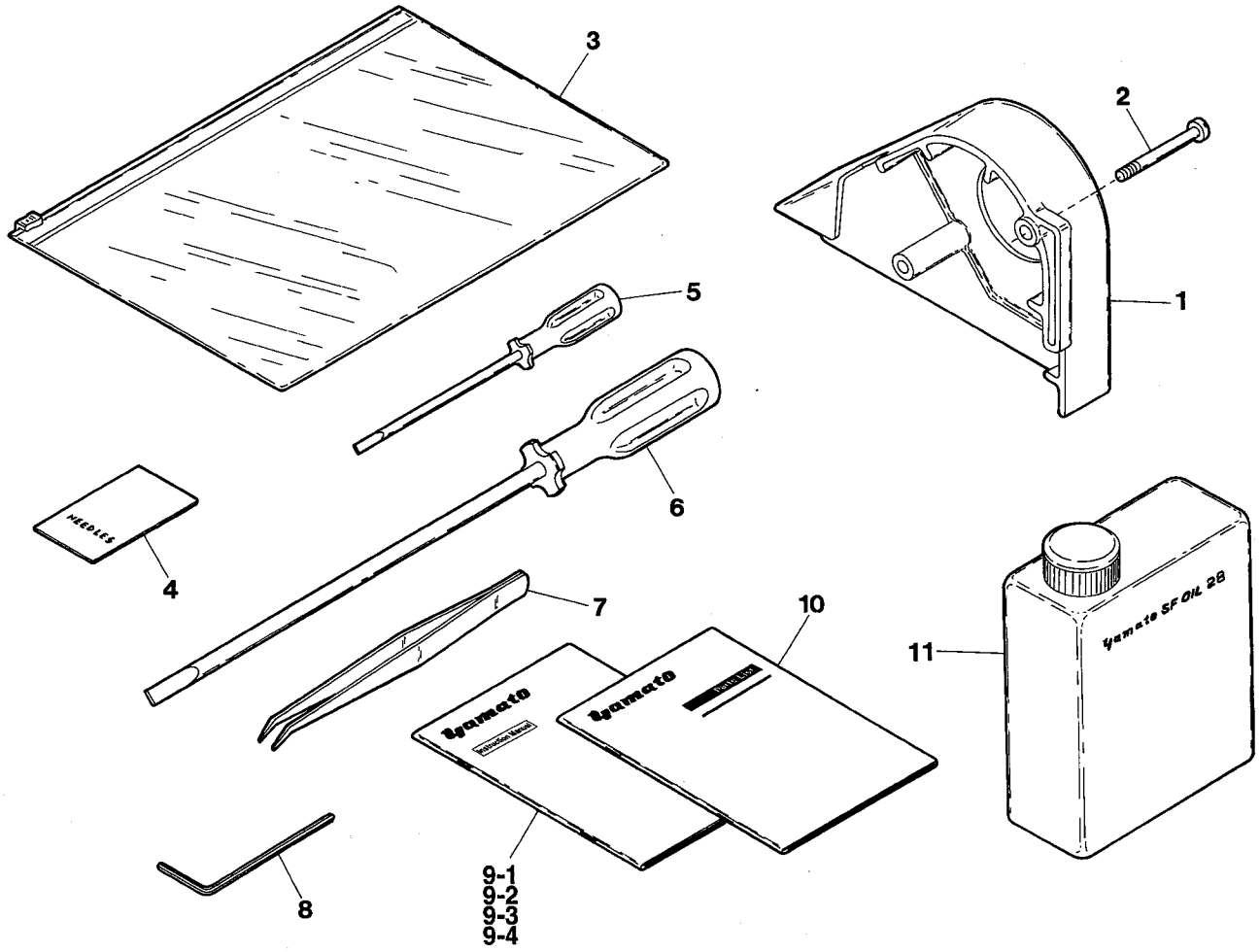
3
2
1
5
6
NEEDLES
4
7
10
11
Yamato SF OIL 28
Yamato
Yamato
9-1
9-2
9-3
9-4
8

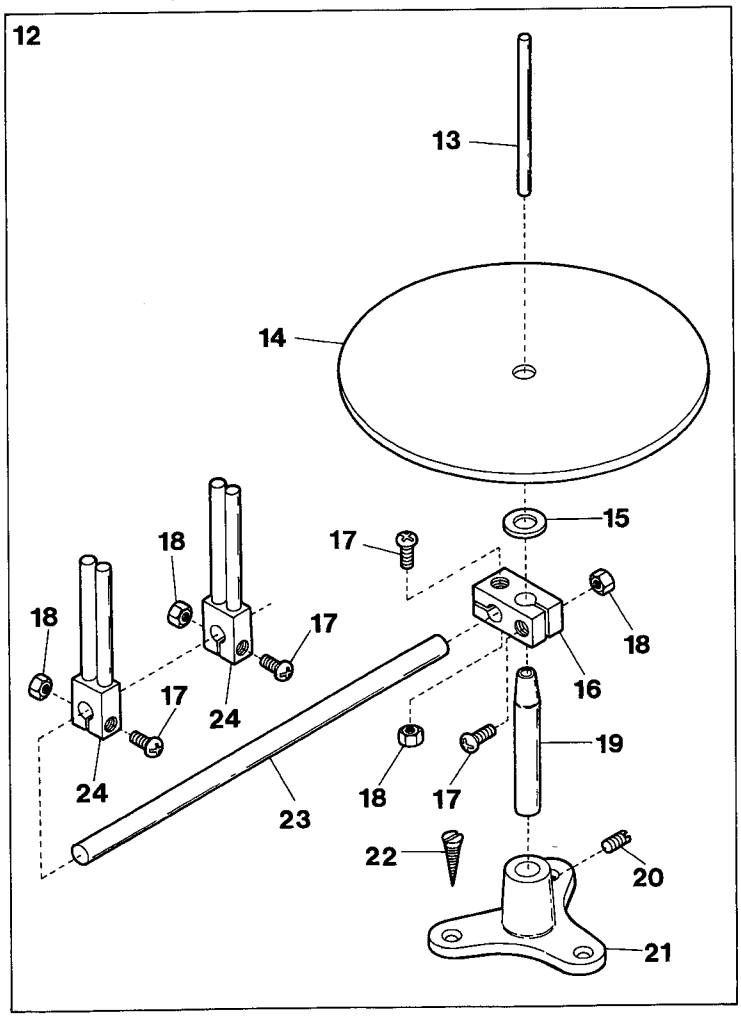
12
13
14
15
18
17
18
17
18
16
17
24
24
19
18
17
23
22
20
21

| Ref.No | Parts No. | Description | 品　名 | Amt. Req |
|---|---|---|---|---|
| 1 | 3500700 | Belt Cover | ベルトカバー | 1 |
| 2 | 110028 | Screw(M6-1 × 46) | 止ネジ | 2 |
| 3 | 9620003 | Bag | 袋 | 1 |
| 4 | ———— | Needle(System : UY × 128GAS) | 針 | 5 |
| 5 | 0099094 | Screwdriver(2.5 × 75mm) | ドライバ | 1 |
| 6 | 0099091 | Screwdriver(5.5 × 200mm) | ドライバ | 1 |
| 7 | 0099051 | Thread Tweezers | ピンセット | 1 |
| 8 | 9620210 | Hexagonal Wrench(2.5mm) | 6角レンチ | 1 |
| 9-1 | 9720160 | Instructions Book | | 1 |
| 9-2 | 9720162 | | 取扱い説明書 | 1 |
| 9-3 | 9720161 | Instructions Book(with UT-A, UT Device) | | 1 |
| 9-4 | 9720163 | | 取扱い説明書(UT-A, UT装置) | 1 |
| 10 | 9710056 | Parts Book | パーツブック | 1 |
| | | | | |
| 11 | 9620008 | SF Oil 28(1 ・) | 油 | 1 |
| 12 | 9620750 | Knitted Tape Stand, C. Set(VG2703) | メリヤステープスタンド | 1 |
| 13 | 9620751 | Tape Pin | テープ支柱 | 1 |
| 14 | 9620752 | Tape Disc | テープ受ケ板 | 1 |
| 15 | 000433 | Washer | ワッシャ | 1 |
| 16 | 9620753 | Tape Disc Block | テープ受ケ板ブロック | 1 |
| 17 | 911062 | Screw(M4-0.7 × 15) | 止ネジ | 4 |
| 18 | 910001 | Nut | ナット | 4 |
| 19 | 9620756 | Tape Stand Bar | テープスタンド棒 | 1 |
| 20 | 001448 | Screw(15/64-28 × 5.5) | 止ネジ | 1 |
| | | | | |
| 21 | 9620757 | Tape Stand | テープスタンド | 1 |
| 22 | 005148 | Wood Screw(φ 4.5 × 25) | 木ネジ | 3 |
| 23 | 9620754 | Tape Guide Bar | テープガイド棒 | 1 |
| 24 | 9620755 | Tape Guide | テープガイド | 2 |

Table top installation 上乗せ式
(with UT-A, UT Device)

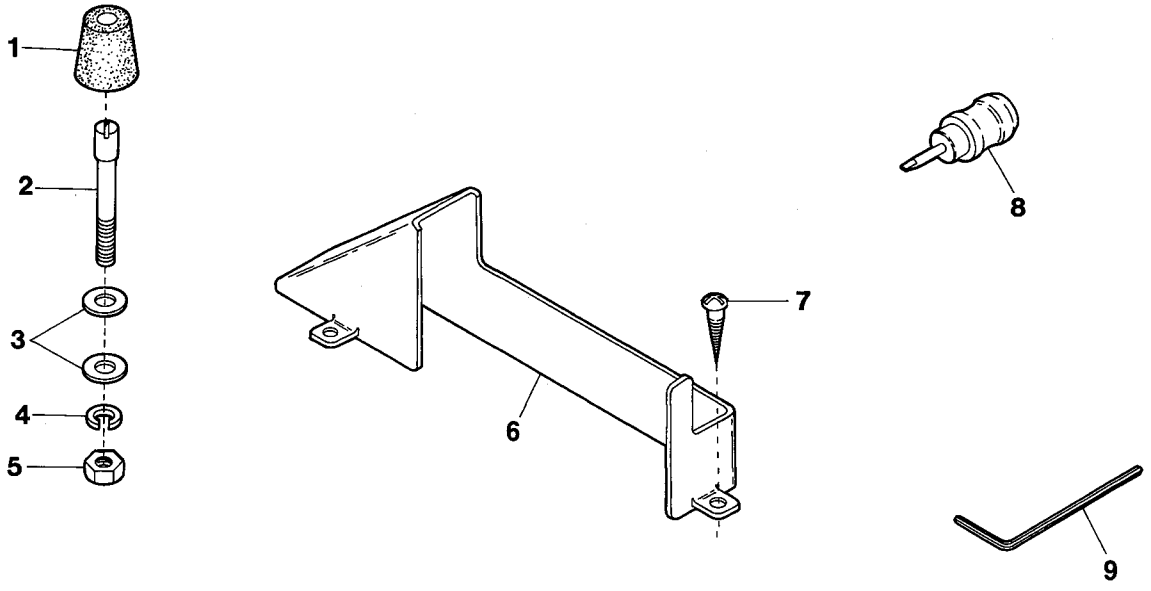


Semi-submerged installation 半沈式
(without UT-A, UT Device)

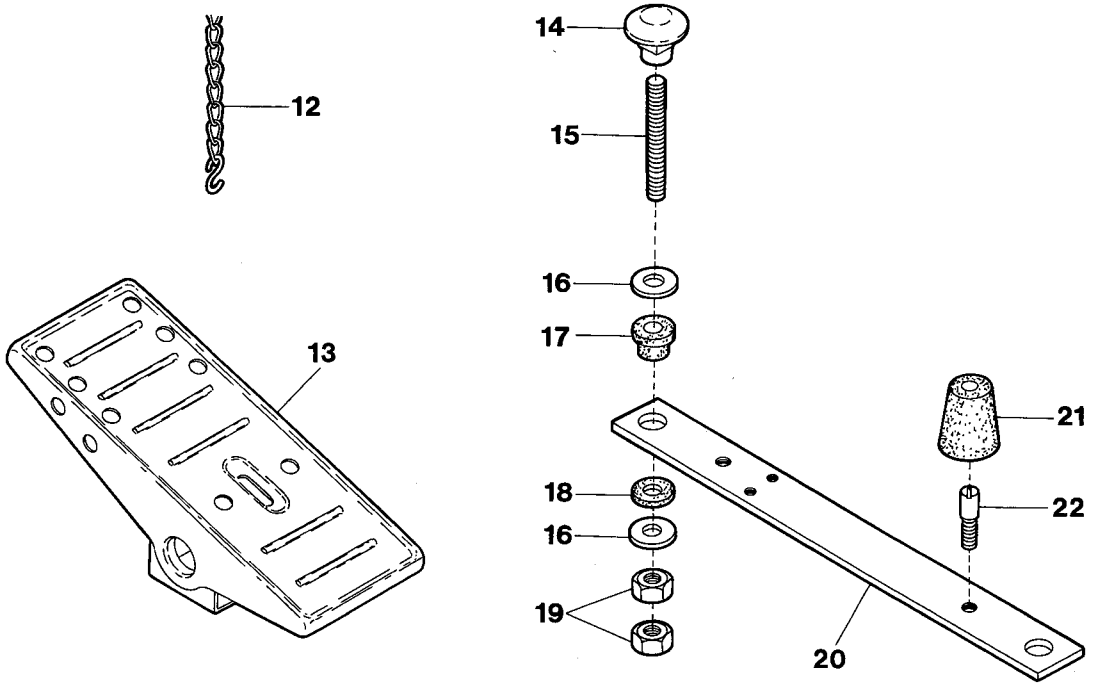

| Ref.No | Parts No. | Description | 品　名 | Amt. Req |
|---|---|---|---|---|
| 1 | 0063009 | Oil Reservoir Rubber Cushion | ゴム座 | 4 |
| 2 | 180008 | Setting Screw(M6-1 × 63) | 取付ケネジ | 4 |
| 3 | 000528 | Washer | ワッシャ | 8 |
| 4 | 000667 | Spring Washer | スプリングワッシャ | 4 |
| 5 | 000011 | Nut | ナット | 4 |
| 6 | 3500701 | Belt Cover(Lower) | ベルトカバー(下) | 1 |
| 7 | 006905 | Wood Screw(φ 5.1 × 20) | 木ネジ | 3 |
| 8 | 0037988 | Screwdriver(Short) | ミニドライバ | 1 |
| 9 | 9620202 | Hexagonal Wrench(2.0mm) | 6角レンチ | 1 |
| 10 | | | | |
| | | | | |
| 11 | | | | |
| 12 | 0037912 | Chain | 鎖 | 1 |
| 13 | 9611074 | Presser Foot Pedal | 押エ揚ゲペダル | 1 |
| 14 | 000070 | Hanging Nut | 吊リナット | 4 |
| 15 | 009858 | Hanging Bolt(M8-1.25 × 75) | 吊リボルト | 4 |
| 16 | 000162 | Washer | ワッシャ | 8 |
| 17 | 0020064 | Supporting Board Rubber Cushion | 受ケ板ゴム座 | 4 |
| 18 | 0063010 | SupportingBoardRubberCushion(Lower) | 受ケ板ゴム座(下) | 4 |
| 19 | 000016 | Nut | ナット | 8 |
| 20 | 3100008 | Supporting Board | 油受ケ板 | 2 |
| | | | | |
| 21 | 0063009 | Oil Reservoir Rubber Cushion | ゴム座 | 4 |
| 22 | 180009 | Setting Screw(M6-1 × 16) | 取付ケネジ | 4 |

# WARNING LABEL 警告ラベル

| LABEL<br>ラベル | Parts No.<br>品番 | Description<br>品名 |
|---|---|---|
| CAUTION<br>Do not operate without eye guard and safety devices.<br>Before threading, changing needle, cleaning etc. switch off main switch. | 390140 | CAUTION IN OPERATION |
| 注 意<br>動く部分でけがをする。<br>安全保護装置をつけて縫製作業をすること。<br>電源を切ってから、糸通し、ボビンや針の交換、掃除や調整をすること。 | 390143 | 操作注意ラベル |
| 高電圧警告<br>DANGER<br>このカバーを開けるときは、電源スイッチを切った後、5分たってから開けること。<br>To open this cover, turn off power supply and wait more than 5 minutes before opening. | 390144 | DANGER : WARNING OF ELECTRIC SHOCK BY HIGH-VOLTAGE<br>感電注意ラベル |
| | 390145 | "Be sure to connect earth line".<br>アースラベル |
| | 390146 | ROTATING-DIRECTION SYMBOL : CHECK CORRECT ROTATING DIRECTION<br>回転方向表示ラベル |
| ケガ注意<br>CAUTION | 390147 | EYE GUARD : TAKE CARE NOT CAUSE INJURY TO EYES<br>BELT COVER : DO NOT INSERT FINGERS<br>ケガ注意ラベル |
| 高温注意<br>CAUTION | 390148 | CAUTION FOR HIGH TEMPERATURE : DO NOT TOUCH STEPPING MOTOR AND SOLENOID<br>高温注意ラベル |

# LIST of MAIN SPARE PARTS
# (主要部品リスト)

# VG2700 Class LIST of MAIN SPARE PARTS(主要部品リスト)(1)

| Main Parts / Models | Needle Clamp 針止メ | Presser Foot, C. Set 押エ(組) | Presser Foot Stitch Tongue 押エ爪 | Stitch Plate 針板 | Differential Feed Dog 前送り |
|---|---|---|---|---|---|
| VG2700-132M * | 0093351 | 3507000 | ———— | 3508000 | 3509004 |
| 132S1 * | 〃 | 〃 | ———— | 3508060 | 〃 |
| 132S2 * | 〃 | 〃 | ———— | 3508065 | 〃 |
| 140M * | 0093352 | 3507002 | ———— | 3508001 | 〃 |
| 140S * | 〃 | 〃 | ———— | 3508011 | 〃 |
| 140S1 * | 〃 | 〃 | ———— | 3508061 | 〃 |
| 140S2 * | 〃 | 〃 | ———— | 3508066 | 〃 |
| 148M | 0093356 | 3507050 | ———— | 3508002 | 〃 |
| 148L | 〃 | 〃 | ———— | 3508007 | 〃 |
| 148S | 〃 | 〃 | ———— | 3508012 | 〃 |
| 148S1 | 〃 | 〃 | ———— | 3508062 | 〃 |
| 148S2 | 〃 | 〃 | ———— | 3508067 | 〃 |
| 156M | 0093357 | 3507052 | ———— | 3508003 | 〃 |
| 156M-31 | 〃 | 〃 | ———— | 3108134 | 3109000 |
| 156L | 〃 | 〃 | ———— | 3508008 | 3509004 |
| 156S1 | 〃 | 〃 | ———— | 3508063 | 〃 |
| 156S2 | 〃 | 〃 | ———— | 3508068 | 〃 |
| 164M | 0093358 | 3507054 | ———— | 3508004 | 〃 |
| 164S1 | 〃 | 〃 | ———— | 3508064 | 〃 |
| 164S2 | 〃 | 〃 | ———— | 3508069 | 〃 |
| | | | | | |
| | | | | | |
| VG2700P-156M | 0093357 | 3507052 | ———— | 3508003 | 3509004 |
| VG2700PR-132M * | 0093351 | 3507000 | ———— | 3508000 | 〃 |
| | | | | | |
| | | | | | |
| | | | | | |
| | | | | | |
| | | | | | |
| | | | | | |

Note : The models with * have 2 needls.
(注) * の付いている機種は2本針です。

| 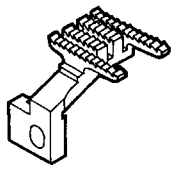 | |
|---|---|
| Main Feed Dog | Looper |
| 後送り | ルーパ |
| 3509005 | 3109300 |
| 〃 | 〃 |
| 〃 | 〃 |
| 〃 | 〃 |
| 〃 | 〃 |
| 〃 | 〃 |
| 〃 | 〃 |
| 〃 | 3109302 |
| 〃 | 〃 |
| 〃 | 〃 |
| 〃 | 〃 |
| 〃 | 〃 |
| 〃 | 3109300 |
| 3106000 | 〃 |
| 3509005 | 〃 |
| 〃 | 〃 |
| 〃 | 〃 |
| 〃 | 〃 |
| 〃 | 〃 |
| 〃 | 〃 |
| | |
| | |
| 3509005 | 3109300 |
| 〃 | 〃 |
| | |
| | |
| | |
| | |
| | |
| | |

# VG2700 Class LIST of MAIN SPARE PARTS(主要部品リスト)(2)

| Main Parts / Models | Needle Clamp 針止メ | Presser Foot, C. Set 押エ(組) | Presser Foot Stitch Tongue 押エ爪 | Stitch Plate 針板 | Differential Feed Dog 前送り |
|---|---|---|---|---|---|
| VG2700-140M-WF1* | 0093352 | 3107275 | ———— | 3508001 | 3509004 |
| 140S-WF1* | 〃 | 〃 | ———— | 3508011 | 〃 |
| 140S1-WF1 * | 〃 | 〃 | ———— | 3508061 | 〃 |
| 140S2-WF1 * | 〃 | 〃 | ———— | 3508066 | 〃 |
| 148M-WF1 | 0093356 | 3107277 | ———— | 3508002 | 〃 |
| 148L-WF1 | 〃 | 〃 | ———— | 3508007 | 〃 |
| 148S-WF1 | 〃 | 〃 | ———— | 3508012 | 〃 |
| 148S1-WF1 | 〃 | 〃 | ———— | 3508062 | 〃 |
| 148S2-WF1 | 〃 | 〃 | ———— | 3508067 | 〃 |
| 156M-WF1 | 0093357 | 3107270 | ———— | 3508003 | 〃 |
| 156L-WF1 | 〃 | 〃 | ———— | 3508008 | 〃 |
| 156S1-WF1 | 〃 | 〃 | ———— | 3508063 | 〃 |
| 156S2-WF1 | 〃 | 〃 | ———— | 3508068 | 〃 |
| 164M-WF1 | 0093358 | 3107280 | ———— | 3508004 | 〃 |
| 164S1-WF1 | 〃 | 〃 | ———— | 3508064 | 〃 |
| 164S2-WF1 | 〃 | 〃 | ———— | 3508069 | 〃 |
| | | | | | |
| | | | | | |
| | | | | | |
| | | | | | |
| VG2703-132M * | 0093351 | 3207150 | ———— | 3508049 | 3509000 |
| 140M * | 0093352 | 3207151 | ———— | 3508050 | 〃 |
| 148M | 0093356 | 3207155 | ———— | 3508051 | 〃 |
| 156M | 0093357 | 3207156 | ———— | 3508052 | 〃 |
| 164M | 0093358 | 3207157 | ———— | 3508053 | 〃 |
| | | | | | |
| | | | | | |
| VG2708-WF8 | 0093357 | 3107290 | ———— | 0094507 | 3509030 |
| | | | | | |
| | | | | | |

Note : The models with * have 2 needls.
(注) * の付いている機種は2本針です。

| 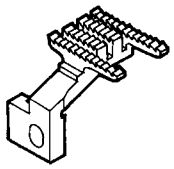 | 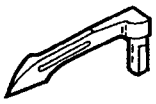 |
|---|---|
| Main<br>Feed Dog | Looper |
| 後送り | ルーパ |
| 3509005 | 3109300 |
| 〃 | 〃 |
| 〃 | 〃 |
| 〃 | 〃 |
| 〃 | 3109302 |
| 〃 | 〃 |
| 〃 | 〃 |
| 〃 | 〃 |
| 〃 | 〃 |
| 〃 | 〃 |
| 〃 | 〃 |
| 〃 | 3109300 |
| 〃 | 〃 |
| 〃 | 〃 |
| 〃 | 〃 |
| 〃 | 〃 |
| | |
| | |
| | |
| | |
| 3509001 | 3109300 |
| 〃 | 〃 |
| 〃 | 3209302 |
| 〃 | 3109300 |
| 〃 | 〃 |
| | |
| | |
| 3509031 | 3109300 |
| | |
| | |

# VG2700 Class LIST of MAIN SPARE PARTS(主要部品リスト)(3)

| Main Parts / Models | Needle Clamp 針止メ | Presser Foot, C. Set 押工(組) | Presser Foot Stitch Tongue 押工爪 | Stitch Plate 針板 | Differential Feed Dog 前送り |
|---|---|---|---|---|---|
| VG2740-132S1 * | 0093351 | 3507060 | 3507061 | 3508080 | 3509007 |
| 132M * | 〃 | 〃 | 〃 | 〃 | 〃 |
| 140S1 * | 0093352 | 〃 | 〃 | 3508081 | 〃 |
| 148S1 | 0093356 | 3507064 | 3507065 | 3508082 | 〃 |
| 148M-SM | 〃 | 0093421 | ———— | 0093417 | 3139007 |
| 156S1 | 0093357 | 3507064 | 3507065 | 3508083 | 3509007 |
| 156S1-WF1 | 〃 | 3107270 | ———— | 〃 | 〃 |
| 164S1 | 0093358 | 3507064 | 3507065 | 3508084 | 〃 |
| | | | | | |
| | | | | | |
| VG2740P(PR)-132S1 * | 0093351 | 3507060 | 3507061 | 3508080 | 3509007 |
| 140S1 * | 0093352 | 〃 | 〃 | 3508081 | 〃 |
| 140M-SM | 〃 | 0093415 | ———— | 0093410 | 3139006 |
| 148S1 | 0093356 | 3507064 | 3507065 | 3508082 | 3509007 |
| 148M | 〃 | 〃 | 〃 | 3508127 | 〃 |
| 148M-SM | 〃 | 0093421 | ———— | 0093417 | 3139007 |
| 156S1 | 0093357 | 3507064 | 3507065 | 3508083 | 3509007 |
| 156M | 〃 | 〃 | 〃 | 3508128 | 〃 |
| 164S1 | 0093358 | 〃 | 〃 | 3508084 | 〃 |
| 164M | 〃 | 〃 | 〃 | 3508129 | 〃 |
| | | | | | |
| | | | | | |
| | | | | | |
| | | | | | |
| | | | | | |
| VG2760-156S3 | 3209121 | 3207039 | 3207044 | 3508077 | 3509022 |
| 164S3 | 3209122 | 3207040 | 3207045 | 3508078 | 〃 |
| | | | | | |
| VG2760PR-156S3 | 3209121 | 3207039 | 3207044 | 3508077 | 3509022 |
| | | | | | |

Note : The models with * have 2 needls.
(注) * の付いている機種は2本針です。

| | 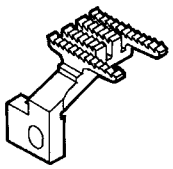 | |
|---|---|---|
| Differential Feed Dog (Middle) | Main Feed Dog | Looper |
| 中送り | 後送り | ルーパ |
| 3509025 | 3509005 | 3109300 |
| 〃 | 〃 | 〃 |
| 〃 | 〃 | 〃 |
| 3509026 | 〃 | 3109302 |
| ———— | 3109044 | 3109300 |
| 3509026 | 3509005 | 〃 |
| 〃 | 〃 | 〃 |
| 〃 | 〃 | 〃 |
| | | |
| | | |
| 3509025 | 3509005 | 3109300 |
| 〃 | 〃 | 〃 |
| ———— | 3109042 | 〃 |
| 3509026 | 3509005 | 3109302 |
| 〃 | 〃 | 〃 |
| ———— | 3109044 | 〃 |
| 3509026 | 3509005 | 3109300 |
| 〃 | 〃 | 〃 |
| 〃 | 〃 | 〃 |
| 〃 | 〃 | 〃 |
| | | |
| | | |
| | | |
| | | |
| | | |
| ———— | 3509023 | 3109306 |
| ———— | 〃 | 〃 |
| | | |
| ———— | 3509023 | 3109306 |
| | | |

# VG2700 Class LIST of MAIN SPARE PARTS(主要部品リスト)(4)

| Main Parts / Models | Needle Clamp 針止メ | Presser Foot, C. Set 押エ(組) | Stitch Plate 針板 | Differential Feed Dog 前送り | Differential Feed Dog (Middle) 中送り |
|---|---|---|---|---|---|
| VG2713-148L-T1N | 0093356 | 3507050 | 3508020 | 3509007 | 3509012 |
| 156M-T1N | 0093357 | 3507052 | 3508019 | 〃 | 〃 |
| 156L-T1N | 〃 | 〃 | 3508021 | 〃 | 〃 |
| 148L-T1N-WF2 | 0093356 | 3507072 | 3508020 | 〃 | 〃 |
| 156M-T1N-WF2 | 0093357 | 3507074 | 3508019 | 〃 | 〃 |
| 156L-T1N-WF2 | 〃 | 〃 | 3508021 | 〃 | 〃 |
| 140S-T4N * | 0093352 | 3507002 | 3508040 | 〃 | 3509010 |
| 148M-T4N | 0093356 | 3507050 | 3508031 | 〃 | 〃 |
| 156M-T4N | 0093357 | 3507052 | 3508032 | 〃 | 〃 |
| 164M-T4N | 0093358 | 3507054 | 3508033 | 〃 | 〃 |
| 140S-T4N-WF2 * | 0093352 | 3507070 | 3508040 | 〃 | 〃 |
| 148M-T4N-WF2 | 0093356 | 3507072 | 3508031 | 〃 | 〃 |
| 156M-T4N-WF2 | 0093357 | 3507074 | 3508032 | 〃 | 〃 |
| 148L-T1A | 0093356 | 3507050 | 3508020 | 3509015 | 3509016 |
| 156M-T1A | 0093357 | 3507052 | 3508019 | 〃 | 〃 |
| 156L-T1A | 〃 | 〃 | 3508021 | 〃 | 〃 |
| 148L-T1A-WF2 | 0093356 | 3507072 | 3508020 | 〃 | 〃 |
| 156M-T1A-WF2 | 0093357 | 3507074 | 3508019 | 〃 | 〃 |
| 156L-T1A-WF2 | 〃 | 〃 | 3508021 | 〃 | 〃 |
| 156L-T2A | 〃 | 3507052 | 3508074 | 〃 | 〃 |
| 156L-T2A-WF2 | 〃 | 3507074 | 〃 | 〃 | 〃 |

Note : The models with * have 2 needls.
(注) * の付いている機種は2本針です。

| 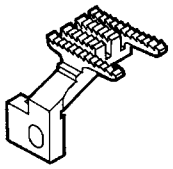 | 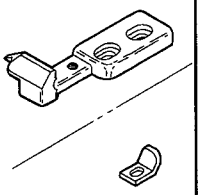 | 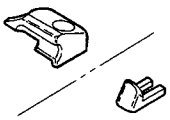 | 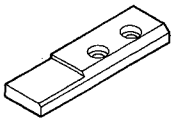 | |
|---|---|---|---|---|
| Main Feed Dog | Fabric Guide (Left) | Fabric Guide (Right) | Supplementary Block | Looper |
| 後送り | 布ガイド(左) | 布ガイド(右) | 補助ブロック | ルーパ |
| 3509005 | 3500631 | 3500632 | ——— | 3109302 |
| 〃 | 〃 | 〃 | ——— | 3109300 |
| 〃 | 〃 | 〃 | ——— | 〃 |
| 〃 | 〃 | 〃 | ——— | 3109302 |
| 〃 | 〃 | 〃 | ——— | 3109300 |
| 〃 | 〃 | 〃 | ——— | 〃 |
| 〃 | 〃 | 〃 | ——— | 〃 |
| 〃 | 〃 | 〃 | ——— | 3109302 |
| 〃 | 〃 | 〃 | ——— | 3109300 |
| 〃 | 〃 | 〃 | ——— | 〃 |
| 〃 | 〃 | 〃 | ——— | 〃 |
| 〃 | 〃 | 〃 | ——— | 3109302 |
| 〃 | 〃 | 〃 | ——— | 3109300 |
| 3509017 | 〃 | 〃 | ——— | 3109302 |
| 〃 | 〃 | 〃 | ——— | 3109300 |
| 〃 | 〃 | 〃 | ——— | 〃 |
| 〃 | 〃 | 〃 | ——— | 3109302 |
| 〃 | 〃 | 〃 | ——— | 3109300 |
| 〃 | 〃 | 〃 | ——— | 〃 |
| 3509019 | 〃 | 〃 | ——— | 〃 |
| 〃 | 〃 | 〃 | ——— | 〃 |
| | | | | |
| | | | | |
| | | | | |
| | | | | |
| | | | | |
| | | | | |
| | | | | |
| | | | | |
| | | | | |

# VG2700 Class LIST of MAIN SPARE PARTS(主要部品リスト)(5)

| Main Parts / Models | Needle Clamp 針止メ | Presser Foot, C. Set 押エ(組) | Stitch Plate 針板 | Differential Feed Dog 前送り | Differential Feed Dog (Middle) 中送り |
|---|---|---|---|---|---|
| VG2713-140S-T4A * | 0093352 | 3507002 | 3508040 | 3509015 | 3509018 |
| 148M-T4A | 0093356 | 3507050 | 3508031 | 〃 | 〃 |
| 156M-T4A | 0093357 | 3507052 | 3508032 | 〃 | 〃 |
| 164M-T4A | 0093358 | 3507054 | 3508033 | 〃 | 〃 |
| 140S-T4A-WF2 * | 0093352 | 3507070 | 3508040 | 〃 | 〃 |
| 148M-T4A-WF2 | 0093356 | 3507072 | 3508031 | 〃 | 〃 |
| 156M-T4A-WF2 | 0093357 | 3507074 | 3508032 | 〃 | 〃 |
| 148M-K1N | 0093356 | 3507050 | 3508025 | 3509007 | 3509012 |
| 156M-K1N | 0093357 | 3507052 | 3508026 | 〃 | 〃 |
| 148M-K1N-WF2 | 0093356 | 3507072 | 3508025 | 〃 | 〃 |
| 156M-K1N-WF2 | 0093357 | 3507074 | 3508026 | 〃 | 〃 |
| 140S-K4N * | 0093352 | 3507002 | 3508041 | 〃 | 3509010 |
| 140S-K4N-WF2 * | 〃 | 3507070 | 〃 | 〃 | 〃 |
| 156M-K4N | 0093357 | 3507052 | 3508087 | 〃 | 〃 |
| 156M-K4N-WF2 | 〃 | 3507074 | 〃 | 〃 | 〃 |
| | | | | | |
| VG2713P-156M-K4N | 0093357 | 3507052 | 3508087 | 3509007 | 3509010 |

Note : The models with * have 2 needls.
(注) * の付いている機種は2本針です。

| 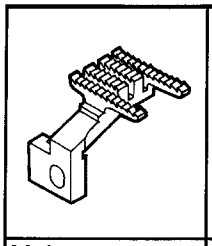 | 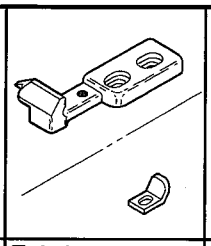 | 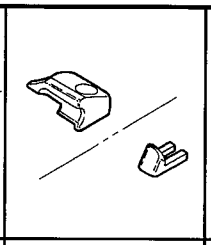 | 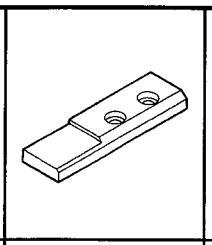 | 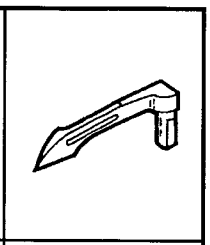 |
|---|---|---|---|---|
| Main Feed Dog | Fabric Guide (Left) | Fabric Guide (Right) | Supplementary Block | Looper |
| 後送り | 布ガイド(左) | 布ガイド(右) | 補助ブロック | ルーパ |
| 3509017 | 3500631 | 3500632 | ———— | 3109300 |
| 〃 | 〃 | 〃 | ———— | 3109302 |
| 〃 | 〃 | 〃 | ———— | 3109300 |
| 〃 | 〃 | 〃 | ———— | 〃 |
| 〃 | 〃 | 〃 | ———— | 〃 |
| 〃 | 〃 | 〃 | ———— | 3109302 |
| 〃 | 〃 | 〃 | ———— | 3109300 |
| 3509005 | 3101320 | 3101321 | 3500637 | 3109302 |
| 〃 | 〃 | 〃 | 〃 | 3109300 |
| 〃 | 〃 | 〃 | 〃 | 3109302 |
| 〃 | 〃 | 〃 | 〃 | 3109300 |
| 〃 | 〃 | 〃 | 〃 | 〃 |
| 〃 | 〃 | 〃 | 〃 | 〃 |
| 〃 | 〃 | 〃 | 〃 | 〃 |
| 〃 | 〃 | 〃 | 〃 | 〃 |
| | | | | |
| 3509005 | 3101320 | 3101321 | 3500637 | 3109300 |
| | | | | |
| | | | | |
| | | | | |
| | | | | |
| | | | | |
| | | | | |
| | | | | |
| | | | | |
| | | | | |
| | | | | |
| | | | | |

# INDEX

VG2700




| Parts No. | Page No. | Ref. No. | Weight(g) |
|---|---|---|---|
| 000009 | 31 | 41 | |
| 000010 | 11 | 35 | |
| 000011 | 31 | 9 | |
| 000011 | 37 | 5 | |
| 000014 | 4 | 52 | |
| 000015 | 2 | 29 | |
| 000015 | 19 | 17 | |
| 000016 | 37 | 19 | |
| 000022 | 4 | 47 | |
| 000070 | 37 | 14 | |
| 000162 | 37 | 16 | |
| 000177 | 3 | 6 | |
| 000177 | 30 | 23 | |
| 000195 | 4 | 16 | |
| 000199 | 12 | 44 | |
| 000206 | 8 | 48 | |
| 000220 | 20 | 5 | |
| 000234 | 13 | 7 | |
| 000306 | 14 | 18 | |
| 000309 | 7 | 20 | |
| 000327 | 8 | 26 | |
| 000327 | 17 | 11 | |
| 000327 | 26 | 19 | |
| 000327 | 27 | 9 | |
| 000327 | 34 | 23 | |
| 000334 | 16 | 4 | |
| 000340 | 16 | 17 | |
| 000360 | 3 | 38 | |
| 000397 | 12 | 29 | |
| 000425 | 13 | 6 | |
| 000426 | 19 | 20 | |
| 000426 | 31 | 51 | |
| 000426 | 34 | 5 | |
| 000433 | 36 | 15 | |
| 000445 | 8 | 2 | |
| 000487 | 8 | 40 | |
| 000487 | 15 | 35 | |
| 000487 | 16 | 31 | |
| 000498 | 31 | 29 | |
| 000505 | 19 | 29 | |
| 000528 | 9 | 8 | |
| 000528 | 31 | 8 | |
| 000528 | 37 | 3 | |
| 000538 | 2 | 32 | |
| 000538 | 3 | 30 | |
| 000538 | 4 | 42 | |
| 000538 | 15 | 48 | |
| 000538 | 16 | 3 | |
| 000538 | 18 | 4 | |
| 000538 | 21 | 4 | |
| 000538 | 25 | 4 | |
| 000538 | 28 | 4 | |
| 000538 | 31 | 18 | |
| 000538 | 31 | 46 | |
| 000555 | 6 | 42 | |
| 000560 | 13 | 40 | |
| 000600 | 6 | 49 | |
| 000600 | 11 | 47 | |
| 000600 | 12 | 68 | |
| 000613 | 14 | 17 | |
| 000613 | 16 | 29 | |
| 000621 | 31 | 34 | |
| 000623 | 10 | 47 | |
| 000637 | 10 | 40 | |
| 000637 | 34 | 16 | |
| 000663 | 4 | 46 | |
| 000665 | 2 | 34 | |
| 000665 | 18 | 12 | |
| 000665 | 21 | 12 | |
| 000665 | 25 | 12 | |
| 000665 | 28 | 12 | |
| 000667 | 6 | 46 | |
| 000667 | 37 | 4 | |
| 000669 | 3 | 46 | |
| 000669 | 11 | 46 | |
| 000669 | 12 | 67 | |
| 000690 | 8 | 57 | |
| 000690 | 11 | 33 | |
| 000690 | 16 | 28 | |
| 000726 | 1 | 34 | |
| 000740 | 10 | 46 | |
| 000750 | 12 | 39 | |
| 000779 | 14 | 3 | |
| 000779 | 15 | 43 | |
| 000779 | 16 | 22 | |
| 000989 | 6 | 2 | |
| 001093 | 29 | 7 | |
| 001107 | 5 | 18 | |
| 001123 | 11 | 43 | |
| 001170 | 8 | 60 | |
| 001186 | 20 | 2 | |
| 001186 | 29 | 11 | |
| 001186 | 30 | 5 | |
| 001228 | 18 | 22 | |
| 001228 | 26 | 10 | |
| 001228 | 28 | 22 | |
| 001230 | 20 | 9 | |
| 001448 | 36 | 20 | |
| 001818 | 3 | 35 | |
| 001900 | 7 | 8 | |
| 002308 | 31 | 19 | |
| 003300 | 20 | 6 | |
| 003635 | 31 | 33 | |
| 003638 | 31 | 14 | |
| 003657 | 30 | 36 | |
| 003670 | 31 | 16 | |
| 004154 | 26 | 18 | |
| 004154 | 27 | 8 | |
| 004154 | 34 | 26 | |
| 004182 | 17 | 20 | |
| 004182 | 26 | 7 | |
| 004182 | 30 | 12 | |
| 004236 | 33 | 8 | |
| 004406 | 31 | 23 | |
| 004440 | 18 | 5 | |
| 004440 | 21 | 5 | |
| 004440 | 25 | 5 | |
| 004440 | 28 | 5 | |
| 004441 | 8 | 7 | |
| 005049 | 11 | 48 | |
| 005049 | 12 | 69 | |
| 005075 | 1 | 27 | |
| 005115 | 31 | 11 | |
| 005122 | 29 | 15 | |
| 005122 | 30 | 9 | |
| 005133 | 20 | 4 | |
| 005148 | 36 | 22 | |
| 005512 | 31 | 31 | |
| 005550 | 31 | 25 | |
| 005554 | 19 | 8 | |
| 005650 | 8 | 36 | |
| 005650 | 16 | 14 | |
| 006038 | 16 | 12 | |
| 006075 | 16 | 6 | |
| 006202 | 2 | 19 | |
| 006202 | 3 | 41 | |
| 006212 | 6 | 35 | |
| 006212 | 12 | 14 | |

# INDEX

VG2700




| Parts No. | Page No. | Ref. No. | Weight(g) |
|---|---|---|---|
| 006233 | 1 | 17 | |
| 006411 | 16 | 16 | |
| 006905 | 32 | 8 | |
| 006905 | 37 | 7 | |
| 006910 | 32 | 15 | |
| 007610 | 31 | 47 | |
| 007621 | 15 | 32 | |
| 007627 | 2 | 41 | |
| 007627 | 3 | 31 | |
| 007627 | 19 | 34 | |
| 009142 | 7 | 10 | |
| 009526 | 9 | 23 | |
| 009604 | 9 | 14 | |
| 009604 | 14 | 9 | |
| 009730 | 15 | 53 | |
| 009749 | 7 | 25 | |
| 009749 | 12 | 65 | |
| 009753 | 16 | 21 | |
| 009858 | 37 | 15 | |
| 009931 | 16 | 18 | |
| 009932 | 19 | 7 | |
| 0010017 | 10 | 10 | |
| 0010017 | 13 | 18 | |
| 0010564 | 32 | 10 | |
| 0010565 | 32 | 9 | |
| 0010938 | 32 | 6-1 | |
| 0011303 | 32 | 16 | |
| 0011709 | 32 | 7 | |
| 0011789 | 31 | 7 | |
| 0011952 | 32 | 5 | |
| 0011957 | 32 | 4 | |
| 0013208 | 12 | 22 | |
| 0020052 | 2 | 8 | |
| 0020064 | 37 | 17 | |
| 0020119 | 3 | 16 | |
| 0020137 | 1 | 26 | |
| 0020271 | 8 | 15 | |
| 0020350 | 11 | 45 | |
| 0020350 | 12 | 66 | |
| 0020551 | 12 | 54 | |
| 0020759 | 1 | 5 | |
| 0024083 | 3 | 2 | |
| 0024083 | 30 | 20 | |
| 0024084 | 3 | 1 | |
| 0024084 | 30 | 19 | |
| 0030255 | 3 | 3 | |
| 0030255 | 30 | 21 | |
| 0031111 | 3 | 7 | |
| 0031111 | 30 | 24 | |
| 0031831 | 13 | 8 | |
| 0032425 | 29 | 5 | |
| 0032426 | 3 | 52 | |
| 0032426 | 29 | 6 | |
| 0032518 | 13 | 3 | |
| 0032646 | 9 | 13 | |
| 0032867 | 12 | 32 | |
| 0032921 | 14 | 22 | |
| 0032952 | 3 | 4 | |
| 0034117 | 16 | 27 | |
| 0034293 | 11 | 44 | |
| 0034979 | 16 | 5 | |
| 0035813 | 3 | 37 | |
| 0036175 | 29 | 4 | |
| 0037108 | 3 | 36 | |
| 0037164 | 1 | 15 | |
| 0037912 | 37 | 12 | |
| 0037988 | 37 | 8 | |
| 0060056 | 15 | 12 | |
| 0060056 | 15 | 37 | |
| 0060142 | 8 | 8 | |
| 0060248 | 31 | 36 | |
| 0060270 | 18 | 16 | |
| 0060270 | 21 | 16 | |
| 0060270 | 25 | 16 | |
| 0060270 | 28 | 16 | |
| 0063009 | 37 | 1 | |
| 0063009 | 37 | 21 | |
| 0063010 | 37 | 18 | |
| 0063051 | 9 | 18 | |
| 0063053 | 9 | 20 | |
| 0063055 | 4 | 8 | |
| 0063056 | 9 | 21 | |
| 0063057 | 9 | 22 | |
| 0063282 | 29 | 14 | |
| 0063282 | 30 | 8 | |
| 0063284 | 30 | 7 | |
| 0063460 | 15 | 54 | |
| 0063515 | 8 | 56 | |
| 0065275 | 2 | 14 | |
| 0065366 | 29 | 13 | |
| 0065372 | 8 | 3 | |
| 0065374 | 16 | 8 | |
| 0065375 | 16 | 9 | |
| 0065376 | 16 | 11 | |
| 0065381 | 16 | 1 | |
| 0065389 | 10 | 30 | |
| 0065395 | 14 | 11 | |
| 0065398 | 14 | 8 | |
| 0065401 | 14 | 16 | |
| 0065402 | 16 | 15 | |
| 0065404 | 16 | 26 | |
| 0065405 | 16 | 23 | |
| 0065407 | 16 | 13 | |
| 0065414 | 15 | 16 | |
| 0065421 | 15 | 17 | |
| 0065436 | 15 | 51 | |
| 0065437 | 15 | 52 | |
| 0067111 | 16 | 30 | |
| 0067126 | 16 | 7 | |
| 0068011 | 1 | 4 | |
| 0068079 | 12 | 60 | |
| 0068181 | 8 | 37 | |
| 0068202 | 11 | 24 | |
| 0077179 | 31 | 52 | |
| 0077270 | 8 | 1 | |
| 0090071 | 3 | 5 | |
| 0090071 | 30 | 22 | |
| 0090620 | 15 | 8 | |
| 0090807 | 3 | 12 | |
| 0090807 | 30 | 29 | |
| 0090812 | 3 | 9 | |
| 0090812 | 30 | 26 | |
| 0090856 | 3 | 11 | |

# INDEX

VG2700




| Parts No. | Page No. | Ref. No. | Weight(g) |
|---|---|---|---|
| 0090856 | 30 | 28 | |
| | | | |
| 0091696 | 20 | 7 | |
| 0091725 | 20 | 3 | |
| | | | |
| 0092232 | 32 | 14 | |
| 0092283 | 31 | 21 | |
| 0092286 | 31 | 12 | |
| 0092287 | 31 | 13 | |
| 0092288 | 31 | 10 | |
| 0092291 | 31 | 30 | |
| 0092292 | 31 | 28 | |
| 0092293 | 31 | 32 | |
| 0092294 | 31 | 27 | |
| 0092305 | 6 | 5 | |
| | | | |
| 0093154 | 6 | 24 | |
| 0093186 | 7 | 24 | |
| 0093212 | 7 | 16 | |
| 0093241 | 19 | 38-1 | |
| 0093242 | 19 | 38-2 | |
| 0093243 | 19 | 38-3 | |
| 0093351 | 17 | 3-1 | |
| 0093352 | 17 | 3-2 | |
| 0093352 | 29 | 16 | |
| 0093356 | 7 | 5-1 | |
| 0093357 | 7 | 5-2 | |
| 0093358 | 7 | 5-3 | |
| 0093365 | 7 | 7 | |
| 0093410 | 29 | 17 | |
| 0093415 | 29 | 10 | |
| 0093417 | 29 | 21 | |
| 0093421 | 29 | 20 | |
| 0093480 | 18 | 6 | |
| 0093480 | 21 | 6 | |
| 0093480 | 25 | 6 | |
| 0093480 | 28 | 6 | |
| 0093483 | 8 | 6 | |
| 0093611 | 8 | 12 | |
| 0093617 | 13 | 16 | |
| 0093690 | 34 | 6 | |
| 0093864 | 1 | 8 | |
| 0093864 | 2 | 13 | |
| | | | |
| 0094201 | 2 | 43 | |
| 0094390 | 8 | 58 | |
| 0094507 | 21 | 20 | |
| 0094615 | 26 | 9 | |

| Parts No. | Page No. | Ref. No. | Weight(g) |
|---|---|---|---|
| | | | |
| 0095027 | 16 | 10 | |
| 0095220 | 34 | 7 | |
| 0095334 | 8 | 59 | |
| 0095367 | 17 | 19 | |
| 0095367 | 26 | 6 | |
| | | | |
| 0099051 | 36 | 7 | |
| 0099091 | 36 | 6 | |
| 0099094 | 36 | 5 | |
| | | | |
| 100002 | 10 | 26 | |
| 100003 | 9 | 9 | |
| 100014 | 13 | 41 | |
| 100020 | 18 | 11 | |
| 100020 | 21 | 11 | |
| 100020 | 25 | 11 | |
| 100020 | 28 | 11 | |
| 100038 | 32 | 13 | |
| 100052 | 18 | 9 | |
| 100052 | 21 | 9 | |
| 100052 | 25 | 9 | |
| 100052 | 28 | 9 | |
| 100057 | 18 | 13 | |
| 100057 | 21 | 13 | |
| 100057 | 25 | 13 | |
| 100057 | 28 | 13 | |
| 100067 | 12 | 53 | |
| | | | |
| 110001 | 32 | 2 | |
| 110002 | 2 | 40 | |
| 110002 | 8 | 11 | |
| 110002 | 15 | 21 | |
| 110002 | 19 | 35 | |
| 110004 | 8 | 18 | |
| 110004 | 11 | 19 | |
| 110004 | 17 | 5 | |
| 110004 | 26 | 13 | |
| 110004 | 27 | 3 | |
| 110004 | 34 | 20 | |
| 110005 | 10 | 16 | |
| 110009 | 2 | 31 | |
| 110009 | 3 | 26 | |
| 110009 | 4 | 41 | |
| 110009 | 5 | 14 | |
| 110009 | 6 | 15 | |
| 110009 | 9 | 5 | |
| 110009 | 12 | 11 | |

| Parts No. | Page No. | Ref. No. | Weight(g) |
|---|---|---|---|
| 110009 | 15 | 49 | |
| 110009 | 16 | 2 | |
| 110010 | 26 | 4 | |
| 110011 | 7 | 12 | |
| 110012 | 1 | 20 | |
| 110012 | 2 | 44 | |
| 110012 | 5 | 33 | |
| 110012 | 6 | 21 | |
| 110012 | 13 | 2 | |
| 110012 | 30 | 34 | |
| 110012 | 31 | 37 | |
| 110013 | 1 | 25 | |
| 110013 | 2 | 11 | |
| 110013 | 3 | 14 | |
| 110013 | 12 | 63 | |
| 110013 | 13 | 34 | |
| 110013 | 29 | 3 | |
| 110013 | 34 | 17 | |
| 110016 | 2 | 23 | |
| 110016 | 19 | 11 | |
| 110019 | 10 | 24 | |
| 110021 | 11 | 15 | |
| 110022 | 2 | 36 | |
| 110022 | 5 | 24 | |
| 110027 | 3 | 49 | |
| 110027 | 22 | 2 | |
| 110027 | 23 | 2 | |
| 110027 | 24 | 2 | |
| 110027 | 24 | 5 | |
| 110027 | 25 | 23 | |
| 110027 | 30 | 14 | |
| 110028 | 36 | 2 | |
| 110030 | 4 | 51 | |
| 110030 | 12 | 20 | |
| 110031 | 2 | 28 | |
| 110031 | 2 | 33 | |
| 110031 | 8 | 5 | |
| 110031 | 9 | 26 | |
| 110031 | 31 | 44 | |
| 110035 | 7 | 4 | |
| 110036 | 5 | 28 | |
| 110038 | 22 | 8 | |
| 110038 | 22 | 12 | |
| 110038 | 23 | 8 | |
| 110038 | 23 | 12 | |
| 110038 | 24 | 10 | |
| 110038 | 26 | 24 | |
| 110038 | 27 | 14 | |

# INDEX

VG2700




| Parts No. | Page No. | Ref. No. | Weight(g) |
|---|---|---|---|
| 110039 | 10 | 4 | |
| 110041 | 2 | 17 | |
| 110043 | 10 | 35 | |
| 110045 | 1 | 2 | |
| 110045 | 11 | 39 | |
| 110045 | 13 | 10 | |
| 110045 | 19 | 16 | |
| 110046 | 11 | 14 | |
| 110048 | 1 | 11 | |
| 110048 | 19 | 28 | |
| 110050 | 19 | 25 | |
| 110054 | 3 | 24 | |
| 110054 | 8 | 16 | |
| 110054 | 30 | 32 | |
| 110076 | 4 | 49 | |
| 110084 | 8 | 25 | |
| 110084 | 17 | 10 | |
| 110084 | 18 | 20 | |
| 110084 | 21 | 19 | |
| 110084 | 25 | 21 | |
| 110084 | 26 | 17 | |
| 110084 | 27 | 7 | |
| 110084 | 28 | 20 | |
| 110084 | 34 | 22 | |
| 110094 | 19 | 32 | |
| 110097 | 15 | 22 | |
| 110101 | 10 | 9 | |
| 110103 | 19 | 21 | |
| 110105 | 34 | 4 | |
| 110106 | 6 | 48 | |
| 110106 | 33 | 6 | |
| 110116 | 4 | 1 | |
| 110117 | 12 | 42 | |
| 110118 | 8 | 49 | |
| 110118 | 12 | 49 | |
| | | | |
| 120001 | 6 | 37 | |
| 120001 | 8 | 54 | |
| 120006 | 8 | 47 | |
| 120008 | 14 | 32 | |
| 120008 | 15 | 5 | |
| 120009 | 2 | 2 | |
| 120009 | 31 | 43 | |
| 120010 | 8 | 42 | |
| 120010 | 31 | 4 | |
| 120011 | 11 | 49 | |
| 120011 | 13 | 39 | |
| 120012 | 5 | 3 | |

| Parts No. | Page No. | Ref. No. | Weight(g) |
|---|---|---|---|
| 120012 | 14 | 15 | |
| 120012 | 15 | 3 | |
| 120013 | 6 | 40 | |
| 120013 | 9 | 11 | |
| 120013 | 10 | 42 | |
| 120013 | 11 | 3 | |
| 120013 | 12 | 2 | |
| 120015 | 6 | 43 | |
| 120016 | 1 | 30 | |
| 120019 | 14 | 2 | |
| 120041 | 15 | 42 | |
| 120049 | 10 | 36 | |
| | | | |
| 130002 | 2 | 38 | |
| 130002 | 7 | 18 | |
| 130003 | 2 | 6 | |
| 130003 | 3 | 28 | |
| 130003 | 15 | 25 | |
| 130007 | 19 | 23 | |
| 130016 | 8 | 23 | |
| 130016 | 17 | 8 | |
| 130016 | 26 | 15 | |
| 130016 | 27 | 5 | |
| | | | |
| 140019 | 19 | 5 | |
| | | | |
| 150001 | 8 | 14 | |
| | | | |
| 160000 | 1 | 14 | |
| 160000 | 15 | 38 | |
| 160001 | 2 | 26 | |
| 160001 | 5 | 7 | |
| 160001 | 8 | 34 | |
| 160001 | 10 | 18 | |
| 160001 | 11 | 22 | |
| 160001 | 12 | 51 | |
| 160001 | 13 | 38 | |
| 160001 | 14 | 23 | |
| 160001 | 15 | 10 | |
| 160001 | 18 | 8 | |
| 160001 | 18 | 17 | |
| 160001 | 19 | 14 | |
| 160001 | 21 | 8 | |
| 160001 | 21 | 17 | |
| 160001 | 25 | 8 | |
| 160001 | 25 | 17 | |
| 160001 | 28 | 8 | |
| 160001 | 28 | 17 | |

| Parts No. | Page No. | Ref. No. | Weight(g) |
|---|---|---|---|
| 160002 | 12 | 5 | |
| 160003 | 5 | 21 | |
| 160003 | 9 | 3 | |
| 160003 | 10 | 29 | |
| 160003 | 14 | 30 | |
| 160003 | 15 | 11 | |
| 160003 | 15 | 40 | |
| 160004 | 5 | 17 | |
| 160004 | 6 | 18 | |
| 160004 | 6 | 26 | |
| 160004 | 11 | 27 | |
| 160004 | 12 | 25 | |
| 160005 | 2 | 21 | |
| 160005 | 5 | 4 | |
| 160005 | 6 | 3 | |
| 160005 | 12 | 26 | |
| 160005 | 15 | 29 | |
| 160006 | 12 | 45 | |
| 160007 | 5 | 5 | |
| 160007 | 6 | 4 | |
| 160007 | 9 | 17 | |
| 160007 | 12 | 18 | |
| 160007 | 14 | 7 | |
| 160007 | 15 | 7 | |
| 160007 | 16 | 24 | |
| 160024 | 10 | 7 | |
| 160025 | 18 | 15 | |
| 160025 | 21 | 15 | |
| 160025 | 25 | 15 | |
| 160025 | 28 | 15 | |
| 160029 | 7 | 13 | |
| 160029 | 10 | 39 | |
| 160033 | 30 | 2 | |
| 160040 | 10 | 2 | |
| | | | |
| 170001 | 2 | 24 | |
| 170001 | 19 | 12 | |
| 170008 | 16 | 32 | |
| 170009 | 8 | 52 | |
| 170010 | 3 | 44 | |
| 170031 | 31 | 35 | |
| 170038 | 8 | 51 | |
| 170041 | 8 | 31 | |
| 170042 | 3 | 53 | |
| 170044 | 4 | 44 | |
| | | | |
| 180005 | 15 | 9 | |
| 180008 | 37 | 2 | |

# INDEX

VG2700




| Parts No. | Page No. | Ref. No. | Weight(g) |
|---|---|---|---|
| 180009 | 37 | 22 | |
| 190004 | 11 | 37 | |
| 190007 | 14 | 31 | |
| 190078 | 2 | 42 | |
| 190078 | 19 | 36 | |
| 190092 | 31 | 49 | |
| 240010 | 14 | 20 | |
| 260006 | 8 | 27 | |
| 260006 | 17 | 12 | |
| 260006 | 26 | 20 | |
| 260006 | 27 | 10 | |
| 260006 | 34 | 24 | |
| 290029 | 3 | 8 | |
| 290029 | 30 | 25 | |
| 290035 | 31 | 20 | |
| 300000 | 10 | 25 | |
| 300000 | 11 | 13 | |
| 300000 | 12 | 48 | |
| 300005 | 5 | 2 | |
| 300005 | 8 | 41 | |
| 300006 | 9 | 6 | |
| 300031 | 32 | 11 | |
| 300033 | 32 | 12 | |
| 300045 | 14 | 33 | |
| 300047 | 31 | 5 | |
| 300100 | 2 | 25 | |
| 300100 | 3 | 45 | |
| 300100 | 19 | 13 | |
| 300104 | 4 | 45 | |
| 300500 | 10 | 5 | |
| 310006 | 34 | 15 | |
| 310007 | 34 | 13 | |
| 310063 | 14 | 21 | |
| 310094 | 9 | 19 | |
| 310096 | 11 | 9 | |
| 310096 | 12 | 27 | |
| 310099 | 6 | 20 | |
| 310100 | 5 | 20 | |
| 310101 | 6 | 19 | |
| 310102 | 12 | 70 | |
| 310106 | 4 | 4 | |
| 320008 | 13 | 23 | |
| 320009 | 13 | 28 | |
| 330000 | 7 | 21 | |
| 330011 | 2 | 20 | |
| 330011 | 2 | 48 | |
| 330016 | 10 | 20 | |
| 330017 | 7 | 1 | |
| 330019 | 2 | 50 | |
| 330019 | 19 | 18 | |
| 340000 | 1 | 31 | |
| 340001 | 10 | 33 | |
| 340003 | 8 | 45 | |
| 340003 | 11 | 31 | |
| 340003 | 12 | 59 | |
| 340014 | 31 | 39 | |
| 350009 | 3 | 20 | |
| 390164 | 1 | 9 | |
| 390173 | 19 | 37 | |
| 910000 | 35 | 10 | |
| 910001 | 35 | 7 | |
| 910001 | 36 | 18 | |
| 910003 | 35 | 14 | |
| 911001 | 35 | 6 | |
| 911002 | 35 | 5 | |
| 911006 | 35 | 9 | |
| 911060 | 35 | 19 | |
| 911062 | 36 | 17 | |
| 930052 | 35 | 12 | |
| 930053 | 35 | 13 | |
| 930055 | 35 | 27 | |
| 1070020 | 32 | 6-2 | |
| 1090190 | 34 | 11 | |
| 1200309 | 33 | 7 | |
| 2020002 | 12 | 40 | |
| 2040033 | 13 | 37 | |
| 2049401 | 1 | 32 | |
| 2100088 | 6 | 38 | |
| 2100194 | 8 | 44 | |
| 2100218 | 6 | 41 | |
| 2100249 | 11 | 11 | |
| 2100253 | 11 | 25 | |
| 2100259 | 11 | 42 | |
| 2100264 | 11 | 41 | |
| 2100265 | 26 | 3 | |
| 2100267 | 8 | 33 | |
| 2100267 | 11 | 29 | |
| 2100902 | 15 | 13 | |
| 2110191 | 10 | 37 | |
| 2110361 | 8 | 43 | |
| 2114124 | 31 | 38 | |
| 3100006 | 4 | 36 | |
| 3100006 | 14 | 4 | |
| 3100008 | 37 | 20 | |
| 3100016 | 2 | 10 | |
| 3100033 | 34 | 3 | |
| 3100061 | 13 | 11 | |
| 3100087 | 29 | 2 | |
| 3100099 | 4 | 5 | |
| 3100100 | 4 | 7 | |
| 3100110 | 8 | 9 | |
| 3100112 | 8 | 10 | |
| 3100122 | 5 | 12 | |
| 3100123 | 5 | 15 | |
| 3100127 | 5 | 13 | |
| 3100127 | 6 | 14 | |
| 3100129 | 6 | 7 | |
| 3100131 | 5 | 10 | |
| 3100132 | 5 | 11 | |
| 3100142 | 10 | 38 | |
| 3100145 | 10 | 44 | |
| 3100146 | 10 | 43 | |
| 3100147 | 10 | 28 | |
| 3100149 | 10 | 31 | |
| 3100150 | 10 | 27 | |
| 3100151 | 10 | 32 | |
| 3100157 | 10 | 14 | |
| 3100158 | 10 | 15 | |
| 3100159 | 10 | 17 | |
| 3100190 | 12 | 15 | |
| 3100192 | 12 | 9 | |
| 3100192 | 14 | 25 | |

# INDEX

VG2700




| Parts No. | Page No. | Ref. No. | Weight(g) |
|---|---|---|---|
| 3100193 | 12 | 7 | |
| 3100195 | 12 | 6 | |
| 3100205 | 10 | 12 | |
| 3100214 | 12 | 43 | |
| 3100231 | 12 | 36 | |
| 3100241 | 5 | 26 | |
| 3100245 | 5 | 30 | |
| 3100250 | 34 | 14 | |
| 3100253 | 34 | 12 | |
| 3100254 | 34 | 10 | |
| 3100256 | 34 | 9 | |
| 3100275 | 6 | 12 | |
| 3100283 | 6 | 13 | |
| 3100305 | 9 | 16 | |
| 3100307 | 9 | 24 | |
| 3100309 | 9 | 7 | |
| 3100310 | 8 | 13 | |
| 3100329 | 13 | 13 | |
| 3100330 | 13 | 43 | |
| 3100331 | 13 | 30 | |
| 3100332 | 13 | 22 | |
| 3100338 | 7 | 26 | |
| 3100345 | 13 | 12 | |
| 3100356 | 13 | 29 | |
| 3100370 | 13 | 5 | |
| 3100371 | 13 | 21 | |
| 3100384 | 3 | 21 | |
| 3100386 | 3 | 22 | |
| 3100416 | 30 | 30 | |
| 3100417 | 30 | 27 | |
| 3100418 | 30 | 33 | |
| 3100533 | 8 | 53 | |
| 3100600 | 14 | 29 | |
| 3100601 | 14 | 28 | |
| 3100602 | 14 | 24 | |
| 3100603 | 14 | 27 | |
| 3100604 | 14 | 6 | |
| 3100605 | 14 | 12 | |
| 3100607 | 14 | 5 | |
| 3100608 | 14 | 14 | |
| 3100609 | 16 | 25 | |
| 3100610 | 16 | 20 | |
| 3100611 | 15 | 2 | |
| 3100612 | 15 | 4 | |
| 3100613 | 15 | 6 | |
| 3100614 | 16 | 19 | |
| 3100616 | 15 | 15 | |
| 3100623 | 12 | 12 | |
| 3100623 | 14 | 26 | |
| 3100625 | 14 | 1 | |
| 3100626 | 14 | 10 | |
| 3100630 | 17 | 18 | |
| 3100630 | 26 | 5 | |
| 3100631 | 17 | 21 | |
| 3100631 | 26 | 8 | |
| 3100636 | 14 | 34 | |
| 3101315 | 18 | 3 | |
| 3101315 | 21 | 3 | |
| 3101315 | 25 | 3 | |
| 3101315 | 28 | 3 | |
| 3101320 | 24 | 3 | |
| 3101321 | 24 | 4 | |
| 3101438 | 31 | 6 | |
| 3101439 | 31 | 40 | |
| 3101442 | 31 | 22 | |
| 3101443 | 31 | 15 | |
| 3101444 | 31 | 45 | |
| 3101447 | 32 | 17 | |
| 3101754 | 11 | 40 | |
| 3103000 | 29 | 1 | |
| 3106000 | 17 | 16 | |
| 3107270 | 18 | 7-2 | |
| 3107270 | 28 | 7 | |
| 3107272 | 18 | 21-2 | |
| 3107272 | 28 | 21-1 | |
| 3107273 | 18 | 21-1 | |
| 3107273 | 28 | 21-2 | |
| 3107274 | 18 | 24-1 | |
| 3107274 | 28 | 24-1 | |
| 3107275 | 18 | 7-4 | |
| 3107277 | 18 | 7-1 | |
| 3107280 | 18 | 7-5 | |
| 3107282 | 18 | 7-3 | |
| 3107285 | 18 | 24-2 | |
| 3107285 | 28 | 24-2 | |
| 3107290 | 21 | 7 | |
| 3107303 | 8 | 19 | |
| 3107303 | 17 | 6 | |
| 3107303 | 18 | 18 | |
| 3107303 | 25 | 18 | |
| 3107303 | 26 | 14 | |
| 3107303 | 27 | 4 | |
| 3107303 | 28 | 18 | |
| 3107303 | 30 | 6 | |
| 3107304 | 8 | 20 | |
| 3107304 | 17 | 7 | |
| 3107304 | 25 | 19 | |
| 3107304 | 29 | 12 | |
| 3107304 | 30 | 10 | |
| 3107306 | 8 | 24 | |
| 3107306 | 17 | 9 | |
| 3107306 | 18 | 19 | |
| 3107306 | 21 | 18 | |
| 3107306 | 25 | 20 | |
| 3107306 | 26 | 16 | |
| 3107306 | 27 | 6 | |
| 3107306 | 28 | 19 | |
| 3107311 | 22 | 1-1 | |
| 3107311 | 23 | 1-1 | |
| 3107311 | 24 | 1-1 | |
| 3107311 | 25 | 22 | |
| 3108134 | 17 | 15 | |
| 3109000 | 17 | 17 | |
| 3109042 | 29 | 18 | |
| 3109044 | 29 | 22 | |
| 3109201 | 5 | 31 | |
| 3109210 | 34 | 18 | |
| 3109300 | 10 | 1-1 | |
| 3109301 | 34 | 27 | |
| 3109302 | 10 | 1-2 | |
| 3109306 | 30 | 18 | |
| 3110073 | 26 | 2 | |
| 3110201 | 18 | 23 | |
| 3110201 | 28 | 23 | |
| 3120076 | 21 | 23 | |
| 3139006 | 29 | 19 | |
| 3139007 | 29 | 23 | |
| 3139200 | 5 | 27 | |
| 3150151 | 13 | 42 | |
| 3150195 | 13 | 36 | |
| 3160138 | 9 | 12 | |
| 3180100 | 10 | 3 | |

# INDEX

VG2700




| Parts No. | Page No. | Ref. No. | Weight(g) |
|---|---|---|---|
| 3200013 | 2 | 47 | |
| 3200033 | 2 | 30 | |
| 3200033 | 19 | 26 | |
| 3200111 | 7 | 3 | |
| 3200112 | 7 | 15 | |
| 3200116 | 7 | 23 | |
| 3200118 | 7 | 22 | |
| 3200132 | 18 | 2 | |
| 3200132 | 21 | 2 | |
| 3200132 | 25 | 2 | |
| 3200132 | 28 | 2 | |
| 3200215 | 11 | 7 | |
| 3200236 | 13 | 15 | |
| 3200237 | 13 | 14 | |
| 3200238 | 13 | 17 | |
| 3201007 | 19 | 19 | |
| 3201105 | 31 | 17 | |
| 3201355 | 12 | 21 | |
| 3204020 | 4 | 53 | |
| 3204021 | 4 | 6 | |
| 3207039 | 30 | 4-1 | |
| 3207040 | 30 | 4-2 | |
| 3207044 | 30 | 11-1 | |
| 3207045 | 30 | 11-2 | |
| 3207046 | 30 | 13 | |
| 3207145 | 28 | 10 | |
| 3207146 | 18 | 14 | |
| 3207146 | 21 | 14 | |
| 3207146 | 25 | 14 | |
| 3207146 | 28 | 14 | |
| 3207148 | 18 | 10 | |
| 3207148 | 21 | 10 | |
| 3207148 | 25 | 10 | |
| 3207150 | 20 | 13-1 | |
| 3207151 | 20 | 13-2 | |
| 3207155 | 20 | 1-1 | |
| 3207156 | 20 | 1-2 | |
| 3207157 | 20 | 1-3 | |
| 3207160 | 20 | 8 | |
| 3209121 | 30 | 1-1 | |
| 3209122 | 30 | 1-2 | |
| 3240072 | 12 | 58 | |

| Parts No. | Page No. | Ref. No. | Weight(g) |
|---|---|---|---|
| 3260010 | 5 | 9 | |
| 3260011 | 6 | 9 | |
| 3400261 | 13 | 20 | |
| 3500004 | 1 | 29 | |
| 3500005 | 1 | 28 | |
| 3500006 | 13 | 45 | |
| 3500007 | 1 | 24 | |
| 3500008 | 2 | 45 | |
| 3500012 | 2 | 12 | |
| 3500021 | 4 | 17 | |
| 3500022 | 4 | 20 | |
| 3500023 | 4 | 30 | |
| 3500024 | 4 | 31 | |
| 3500025 | 4 | 25 | |
| 3500026 | 4 | 28 | |
| 3500027 | 4 | 29 | |
| 3500028 | 4 | 26 | |
| 3500029 | 4 | 27 | |
| 3500030 | 4 | 21 | |
| 3500031 | 4 | 23 | |
| 3500032 | 4 | 24 | |
| 3500033 | 4 | 32 | |
| 3500034 | 4 | 33 | |
| 3500035 | 4 | 34 | |
| 3500036 | 4 | 35 | |
| 3500037 | 4 | 37 | |
| 3500038 | 4 | 38 | |
| 3500039 | 4 | 22 | |
| 3500040 | 4 | 19 | |
| 3500041 | 4 | 14 | |
| 3500041 | 4 | 54 | |
| 3500042 | 4 | 2 | |
| 3500044 | 4 | 10 | |
| 3500045 | 4 | 11 | |
| 3500046 | 4 | 15 | |
| 3500047 | 4 | 12 | |
| 3500048 | 4 | 13 | |
| 3500050 | 4 | 9 | |
| 3500051 | 6 | 1 | |
| 3500054 | 6 | 6 | |
| 3500056 | 6 | 8 | |
| 3500060 | 6 | 17 | |
| 3500062 | 6 | 22 | |
| 3500064 | 6 | 23 | |
| 3500065 | 6 | 44 | |

| Parts No. | Page No. | Ref. No. | Weight(g) |
|---|---|---|---|
| 3500066 | 6 | 39 | |
| 3500067 | 6 | 45 | |
| 3500068 | 6 | 11 | |
| 3500069 | 6 | 10 | |
| 3500070 | 6 | 31 | |
| 3500071 | 6 | 30 | |
| 3500072 | 6 | 27 | |
| 3500073 | 6 | 28 | |
| 3500074 | 6 | 32 | |
| 3500075 | 6 | 33 | |
| 3500076 | 6 | 29 | |
| 3500077 | 6 | 34 | |
| 3500078 | 7 | 2 | |
| 3500079 | 6 | 36 | |
| 3500081 | 9 | 1 | |
| 3500082 | 9 | 2 | |
| 3500084 | 9 | 4 | |
| 3500086 | 9 | 10 | |
| 3500088 | 4 | 3 | |
| 3500091 | 7 | 14 | |
| 3500101 | 5 | 1 | |
| 3500104 | 5 | 6 | |
| 3500105 | 12 | 10 | |
| 3500109 | 5 | 16 | |
| 3500111 | 5 | 19 | |
| 3500113 | 12 | 30 | |
| 3500114 | 12 | 34 | |
| 3500115 | 12 | 33 | |
| 3500116 | 12 | 31 | |
| 3500118 | 12 | 37 | |
| 3500119 | 12 | 17 | |
| 3500120 | 12 | 47 | |
| 3500121 | 12 | 46 | |
| 3500122 | 12 | 38 | |
| 3500123 | 12 | 41 | |
| 3500124 | 12 | 24 | |
| 3500126 | 12 | 57 | |
| 3500127 | 12 | 13 | |
| 3500128 | 12 | 8 | |
| 3500129 | 12 | 4 | |
| 3500130 | 12 | 3 | |
| 3500131 | 12 | 1 | |
| 3500132 | 12 | 55 | |
| 3500133 | 12 | 52 | |
| 3500136 | 12 | 50 | |
| 3500137 | 12 | 61 | |
| 3500138 | 12 | 56 | |
| 3500139 | 12 | 62 | |

# INDEX

VG2700




| Parts No. | Page No. | Ref. No. | Weight(g) |
|---|---|---|---|
| 3500141 | 12 | 64 | |
| 3500142 | 11 | 16 | |
| 3500143 | 11 | 12 | |
| 3500144 | 11 | 10 | |
| 3500146 | 11 | 8 | |
| 3500147 | 11 | 1 | |
| 3500148 | 11 | 2 | |
| 3500149 | 11 | 4 | |
| 3500150 | 11 | 21 | |
| 3500151 | 11 | 20 | |
| 3500152 | 11 | 5 | |
| 3500153 | 11 | 23 | |
| 3500154 | 11 | 6 | |
| 3500155 | 11 | 26 | |
| 3500156 | 11 | 28 | |
| 3500157 | 11 | 30 | |
| 3500158 | 11 | 32 | |
| 3500160 | 11 | 38 | |
| 3500161 | 11 | 36 | |
| 3500162 | 12 | 16 | |
| 3500163 | 12 | 23 | |
| 3500164 | 12 | 28 | |
| 3500165 | 5 | 22 | |
| 3500166 | 5 | 23 | |
| 3500167 | 5 | 29 | |
| 3500171 | 10 | 34 | |
| 3500172 | 10 | 45 | |
| 3500174 | 10 | 41 | |
| 3500175 | 10 | 6 | |
| 3500176 | 10 | 23 | |
| 3500177 | 10 | 21 | |
| 3500178 | 10 | 22 | |
| 3500179 | 10 | 13 | |
| 3500180 | 10 | 19 | |
| 3500190 | 12 | 71 | |
| 3500201 | 1 | 1 | |
| 3500202 | 3 | 27 | |
| 3500203 | 4 | 39 | |
| 3500204 | 4 | 40 | |
| 3500205 | 4 | 43 | |
| 3500206 | 4 | 48 | |
| 3500207 | 1 | 6 | |
| 3500208 | 4 | 50 | |
| 3500211 | 1 | 18 | |
| 3500212 | 1 | 10 | |
| 3500213 | 1 | 13 | |
| 3500214 | 1 | 19 | |
| 3500215 | 1 | 12 | |

| Parts No. | Page No. | Ref. No. | Weight(g) |
|---|---|---|---|
| 3500216 | 1 | 16 | |
| 3500217 | 1 | 21 | |
| 3500219 | 2 | 3 | |
| 3500221 | 2 | 37 | |
| 3500222 | 2 | 27 | |
| 3500223 | 2 | 22 | |
| 3500223 | 19 | 10 | |
| 3500224 | 2 | 1 | |
| 3500225 | 2 | 35 | |
| 3500226 | 2 | 49 | |
| 3500227 | 2 | 4 | |
| 3500228 | 2 | 5 | |
| 3500229 | 13 | 9 | |
| 3500230 | 2 | 46 | |
| 3500232 | 3 | 39 | |
| 3500233 | 2 | 39 | |
| 3500233 | 19 | 33 | |
| 3500234 | 3 | 40 | |
| 3500236 | 13 | 44 | |
| 3500237 | 3 | 42 | |
| 3500238 | 3 | 33 | |
| 3500240 | 3 | 43 | |
| 3500242 | 3 | 50 | |
| 3500245 | 3 | 47 | |
| 3500246 | 3 | 48 | |
| 3500247 | 3 | 51 | |
| 3500249 | 3 | 55 | |
| 3500250 | 3 | 54 | |
| 3500255 | 2 | 16 | |
| 3500255 | 26 | 30 | |
| 3500256 | 2 | 18 | |
| 3500269 | 3 | 25 | |
| 3500270 | 3 | 32 | |
| 3500271 | 3 | 34 | |
| 3500274 | 10 | 8 | |
| 3500278 | 6 | 47 | |
| 3500281 | 3 | 19 | |
| 3500282 | 3 | 23 | |
| 3500282 | 30 | 31 | |
| 3500284 | 3 | 15 | |
| 3500285 | 3 | 17 | |
| 3500286 | 3 | 13 | |
| 3500287 | 3 | 10 | |
| 3500288 | 3 | 18 | |
| 3500291 | 8 | 39 | |
| 3500292 | 8 | 55 | |
| 3500293 | 8 | 35 | |
| 3500294 | 8 | 38 | |

| Parts No. | Page No. | Ref. No. | Weight(g) |
|---|---|---|---|
| 3500295 | 8 | 46 | |
| 3500296 | 8 | 30 | |
| 3500297 | 18 | 1 | |
| 3500297 | 21 | 1 | |
| 3500297 | 25 | 1 | |
| 3500297 | 28 | 1 | |
| 3500299 | 8 | 50 | |
| 3500300 | 8 | 32 | |
| 3500304 | 8 | 4 | |
| 3500305 | 8 | 28 | |
| 3500402 | 13 | 4 | |
| 3500403 | 6 | 16 | |
| 3500404 | 13 | 33 | |
| 3500407 | 4 | 18 | |
| 3500408 | 12 | 35 | |
| 3500410 | 13 | 32 | |
| 3500411 | 12 | 19 | |
| 3500412 | 13 | 1 | |
| 3500413 | 5 | 25 | |
| 3500415 | 13 | 26 | |
| 3500418 | 13 | 31 | |
| 3500419 | 5 | 32 | |
| 3500422 | 13 | 19 | |
| 3500423 | 13 | 24 | |
| 3500424 | 13 | 27 | |
| 3500425 | 13 | 35 | |
| 3500426 | 10 | 11 | |
| 3500430 | 1 | 3 | |
| 3500431 | 1 | 7 | |
| 3500432 | 2 | 9 | |
| 3500435 | 3 | 29 | |
| 3500493 | 34 | 8 | |
| 3500514 | 30 | 35 | |
| 3500603 | 34 | 1 | |
| 3500605 | 34 | 2 | |
| 3500615 | 7 | 11 | |
| 3500616 | 7 | 19 | |
| 3500617 | 7 | 17 | |
| 3500631 | 22 | 3 | |
| 3500631 | 23 | 3 | |
| 3500632 | 22 | 4 | |
| 3500632 | 23 | 4 | |
| 3500634 | 22 | 6 | |
| 3500634 | 23 | 6 | |
| 3500635 | 22 | 7 | |
| 3500635 | 23 | 7 | |
| 3500637 | 24 | 6 | |
| 3500670 | 33 | 1 | |

# INDEX

VG2700




| Parts No. | Page No. | Ref. No. | Weight(g) |
|---|---|---|---|
| 3500671 | 33 | 2 | |
| 3500672 | 33 | 5 | |
| 3500675 | 33 | 3 | |
| 3500676 | 33 | 4 | |
| 3500697 | 15 | 33 | |
| 3500698 | 15 | 46 | |
| 3500699 | 16 | 33 | |
| 3500700 | 36 | 1 | |
| 3500701 | 37 | 6 | |
| | | | |
| 3501122 | 15 | 50 | |
| 3501181 | 31 | 2 | |
| 3501182 | 31 | 3 | |
| 3501183 | 31 | 24 | |
| 3501185 | 31 | 42 | |
| 3501187 | 31 | 50 | |
| 3501250 | 15 | 41 | |
| 3501251 | 15 | 39 | |
| 3501252 | 15 | 36 | |
| 3501253 | 15 | 47 | |
| 3501259 | 15 | 34-2 | |
| 3501260 | 15 | 34-1 | |
| 3501265 | 15 | 45 | |
| 3501270 | 15 | 14 | |
| 3501271 | 15 | 28 | |
| 3501272 | 15 | 27 | |
| 3501275 | 15 | 30 | |
| 3501276 | 15 | 26 | |
| 3501280 | 15 | 24 | |
| 3501281 | 14 | 19 | |
| 3501282 | 15 | 23 | |
| 3501283 | 15 | 18 | |
| 3501284 | 15 | 20 | |
| 3501289 | 15 | 31-2 | |
| 3501290 | 15 | 31-1 | |
| 3501295 | 15 | 44 | |
| 3501302 | 26 | 1 | |
| 3501302 | 29 | 8 | |
| | | | |
| 3502003 | 19 | 1 | |
| 3502004 | 19 | 15 | |
| 3502005 | 19 | 30 | |
| 3502006 | 19 | 6 | |
| 3502007 | 19 | 3 | |
| 3502008 | 19 | 24 | |
| 3502009 | 19 | 22 | |
| 3502010 | 19 | 2 | |
| 3502011 | 19 | 27 | |

| Parts No. | Page No. | Ref. No. | Weight(g) |
|---|---|---|---|
| 3502012 | 19 | 4 | |
| 3502013 | 19 | 9 | |
| 3502015 | 19 | 31 | |
| 3502021 | 32 | 3 | |
| 3502022 | 31 | 48 | |
| 3502023 | 32 | 1 | |
| | | | |
| 3507000 | 17 | 4-1 | |
| 3507002 | 17 | 4-2 | |
| 3507050 | 8 | 17-1 | |
| 3507052 | 8 | 17-2 | |
| 3507054 | 8 | 17-3 | |
| 3507058 | 26 | 12 | |
| 3507058 | 27 | 2 | |
| 3507060 | 26 | 11 | |
| 3507061 | 26 | 21 | |
| 3507064 | 27 | 1 | |
| 3507065 | 27 | 11 | |
| 3507070 | 25 | 7-3 | |
| 3507072 | 25 | 7-1 | |
| 3507074 | 25 | 7-2 | |
| 3507076 | 25 | 7-4 | |
| 3507083 | 26 | 25-1 | |
| 3507084 | 26 | 25-2 | |
| 3507085 | 27 | 15 | |
| 3507087 | 27 | 16 | |
| 3507087 | 34 | 25 | |
| 3507091 | 22 | 1-2 | |
| 3507091 | 23 | 1-2 | |
| 3507091 | 24 | 1-2 | |
| 3507095 | 34 | 19 | |
| 3507097 | 34 | 21 | |
| | | | |
| 3508000 | 17 | 13-1 | |
| 3508001 | 17 | 13-2 | |
| 3508002 | 7 | 9-1 | |
| 3508003 | 7 | 9-2 | |
| 3508004 | 7 | 9-3 | |
| 3508007 | 17 | 1-1 | |
| 3508008 | 17 | 1-2 | |
| 3508011 | 17 | 14-1 | |
| 3508012 | 17 | 2-1 | |
| 3508019 | 22 | 9-3 | |
| 3508019 | 23 | 9-1 | |
| 3508020 | 22 | 9-1 | |
| 3508020 | 23 | 9-2 | |
| 3508021 | 22 | 9-2 | |
| 3508021 | 23 | 9-3 | |

| Parts No. | Page No. | Ref. No. | Weight(g) |
|---|---|---|---|
| 3508025 | 24 | 7-1 | |
| 3508026 | 24 | 7-2 | |
| 3508031 | 22 | 13-2 | |
| 3508031 | 23 | 18-1 | |
| 3508032 | 22 | 13-3 | |
| 3508032 | 23 | 18-2 | |
| 3508033 | 22 | 13-4 | |
| 3508033 | 23 | 18-3 | |
| 3508040 | 22 | 13-1 | |
| 3508040 | 23 | 18-4 | |
| 3508041 | 24 | 13-1 | |
| 3508049 | 20 | 14-1 | |
| 3508050 | 20 | 14-2 | |
| 3508051 | 20 | 10-1 | |
| 3508052 | 20 | 10-2 | |
| 3508053 | 20 | 10-3 | |
| 3508060 | 17 | 14-2 | |
| 3508061 | 17 | 14-3 | |
| 3508062 | 17 | 2-2 | |
| 3508063 | 17 | 2-3 | |
| 3508064 | 17 | 2-4 | |
| 3508065 | 17 | 14-4 | |
| 3508066 | 17 | 14-5 | |
| 3508067 | 17 | 2-5 | |
| 3508068 | 17 | 2-6 | |
| 3508069 | 17 | 2-7 | |
| 3508074 | 23 | 16 | |
| 3508077 | 30 | 15-1 | |
| 3508078 | 30 | 15-2 | |
| 3508080 | 26 | 26-1 | |
| 3508081 | 26 | 26-2 | |
| 3508082 | 27 | 17-1 | |
| 3508083 | 27 | 17-2 | |
| 3508084 | 27 | 17-3 | |
| 3508086 | 24 | 13-2 | |
| 3508087 | 24 | 11 | |
| 3508125 | 26 | 27 | |
| 3508126 | 26 | 28 | |
| 3508127 | 27 | 18-1 | |
| 3508128 | 27 | 18-2 | |
| 3508129 | 27 | 18-3 | |
| 3508136 | 26 | 29 | |
| 3508208 | 32 | 18 | |
| | | | |
| 3509000 | 20 | 12 | |
| 3509001 | 20 | 11 | |
| 3509004 | 11 | 17 | |
| 3509005 | 11 | 18 | |

# INDEX

VG2700




| Parts No. | Page No. | Ref. No. | Weight(g) |
|---|---|---|---|
| 3509007 | 22 | 10 | |
| 3509007 | 24 | 8 | |
| 3509007 | 26 | 22 | |
| 3509007 | 27 | 12 | |
| 3509010 | 22 | 14 | |
| 3509010 | 24 | 12 | |
| 3509012 | 22 | 11 | |
| 3509012 | 24 | 9 | |
| 3509015 | 23 | 14 | |
| 3509016 | 23 | 15 | |
| 3509017 | 23 | 13 | |
| 3509018 | 23 | 19 | |
| 3509019 | 23 | 17 | |
| 3509022 | 30 | 17 | |
| 3509023 | 30 | 16 | |
| 3509025 | 26 | 23 | |
| 3509026 | 27 | 13 | |
| 3509030 | 21 | 22 | |
| 3509031 | 21 | 21 | |
| 3509320 | 9 | 25 | |
| 3509969 | 31 | 1 | |
| 4109403 | 1 | 33 | |
| 9611074 | 37 | 13 | |
| 9620003 | 36 | 3 | |
| 9620008 | 36 | 11 | |
| 9620202 | 37 | 9 | |
| 9620210 | 36 | 8 | |
| 9620631 | 35 | 2 | |
| 9620666 | 35 | 22 | |
| 9620670 | 35 | 3 | |
| 9620673 | 35 | 8 | |
| 9620675 | 35 | 11 | |
| 9620678 | 35 | 23 | |
| 9620679 | 35 | 24 | |
| 9620680 | 35 | 25 | |
| 9620681 | 35 | 26 | |
| 9620688 | 35 | 18 | |
| 9620689 | 35 | 4 | |
| 9620690 | 35 | 21 | |
| 9620691 | 35 | 20 | |
| 9620696 | 35 | 1 | |
| 9620700 | 35 | 17 | |
| 9620703 | 35 | 16 | |
| 9620750 | 36 | 12 | |
| 9620751 | 36 | 13 | |

| Parts No. | Page No. | Ref. No. | Weight(g) |
|---|---|---|---|
| 9620752 | 36 | 14 | |
| 9620753 | 36 | 16 | |
| 9620754 | 36 | 23 | |
| 9620755 | 36 | 24 | |
| 9620756 | 36 | 19 | |
| 9620757 | 36 | 21 | |
| 9710056 | 36 | 10 | |
| 9720160 | 36 | 9-1 | |
| 9720161 | 36 | 9-3 | |
| 9720162 | 36 | 9-2 | |
| 9720163 | 36 | 9-4 | |

| Parts No. | Page No. | Ref. No. | Weight(g) |
|---|---|---|---|

yamato
ヤマトミシン製造株式会社
YAMATO SEWING MACHINE MFG. CO.,LTD.

4-4-12,NISHITENMA, KITA-KU, OSAKA,JAPAN
TEL : 81-6-6364-1321 FAX : 81-6-6364-1307

〒530-0047 大阪市北区西天満4丁目4番12号
TEL(06)6364-1321(代) FAX(06)6365-5176

P/N 9710056(P)
No. 4 Edited in 2005.6
(VG2700)

Printed in Japan 2005.7.1T